HeatBlocker High Temperature Exhaust Insulation

distributed by:

NEXTRAN® TRUCK CENTERS

September 9, 2021
REV 13

Mack Truck Insulation Kits

Mack
MR 688S/LE 613
Kit #K185

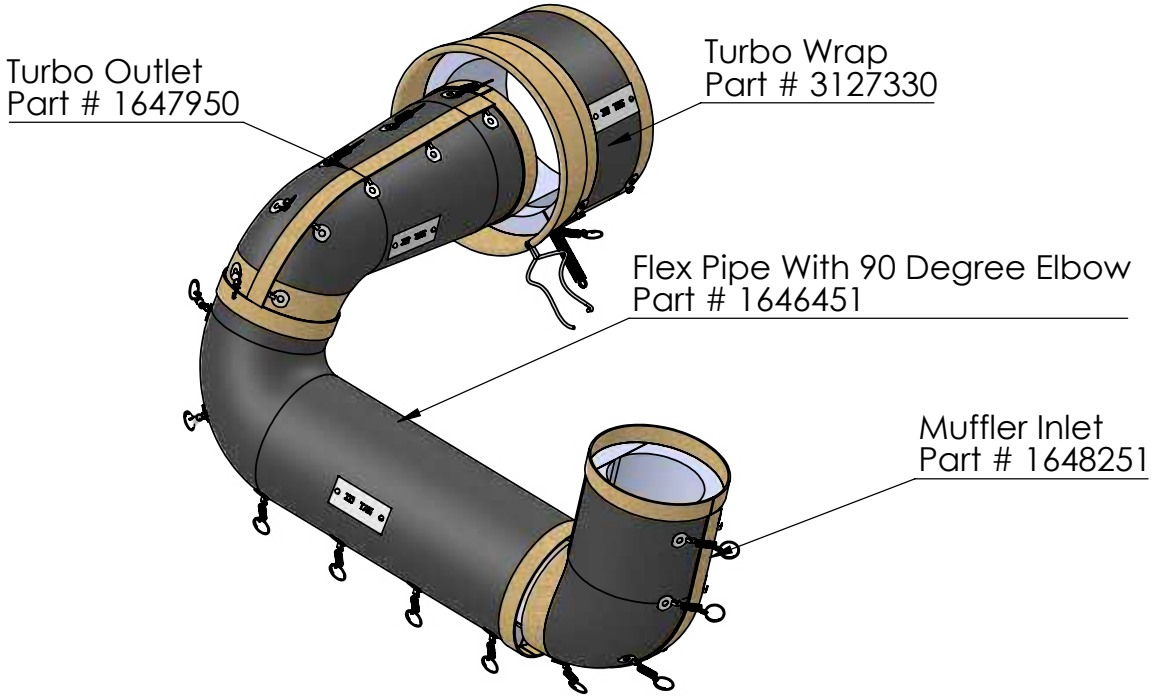

PROPRIETARY AND CONFIDENTIAL
THE INFORMATION HEREON IS THE PROPERTY OF KALB CORP. AND/OR ITS SUBSIDIARIES. WITHOUT WRITTEN PERMISSION, ANY COPYING, TRANSMITTAL TO OTHERS, AND ANY USE EXCEPT THAT FOR WHICH IT IS LOANED, IS PROHIBITED

Kit K185

Mack
MRU/LEU 613 Diesel Spark Assist 2007-2010
(2010 please check K290 for MRU & K338 for LEU)
K186

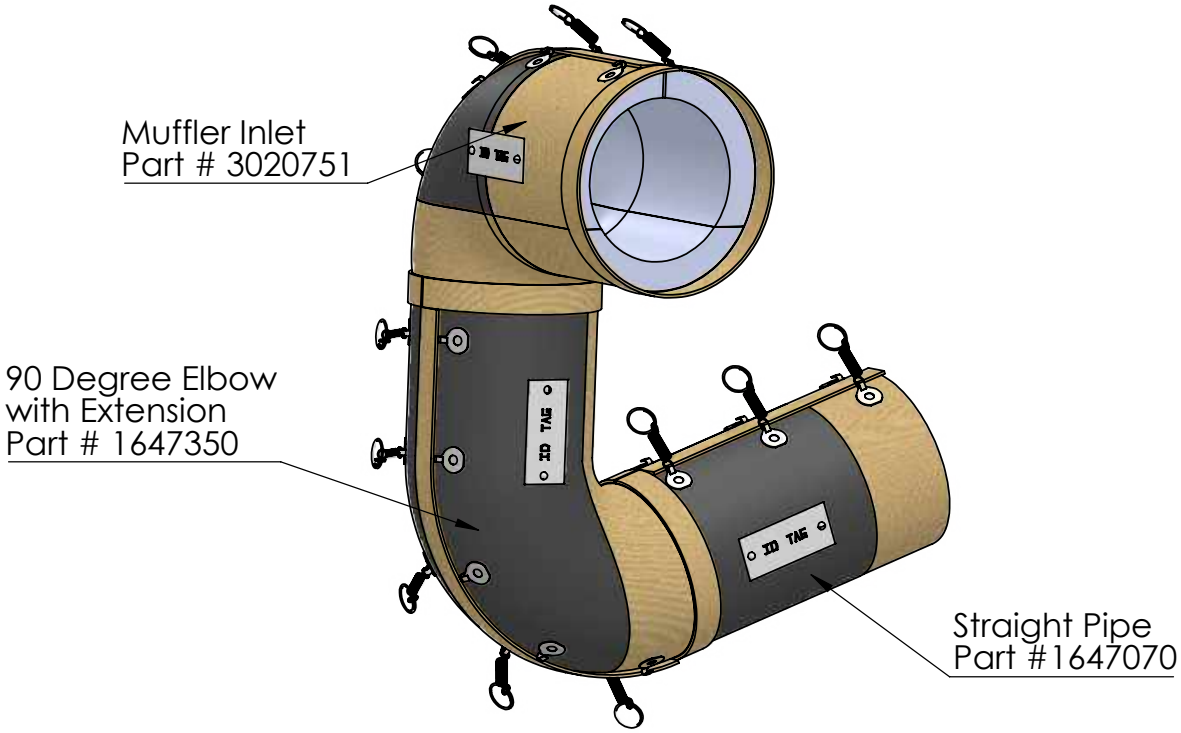

PROPRIETARY AND CONFIDENTIAL
THE INFORMATION HEREON IS THE PROPERTY OF KALB CORP. AND/OR ITS SUBSIDIARIES.
WITHOUT WRITTEN PERMISSION, ANY COPYING, TRANSMITTAL TO OTHERS, AND ANY
USE EXCEPT THAT FOR WHICH IT IS LOANED, IS PROHIBITED

Kit K186

Mack
LEU 633/LR CNG
Kit # K225

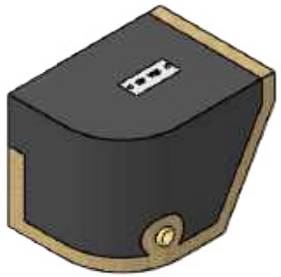

Manifold Transition Cover
Part # 1473420

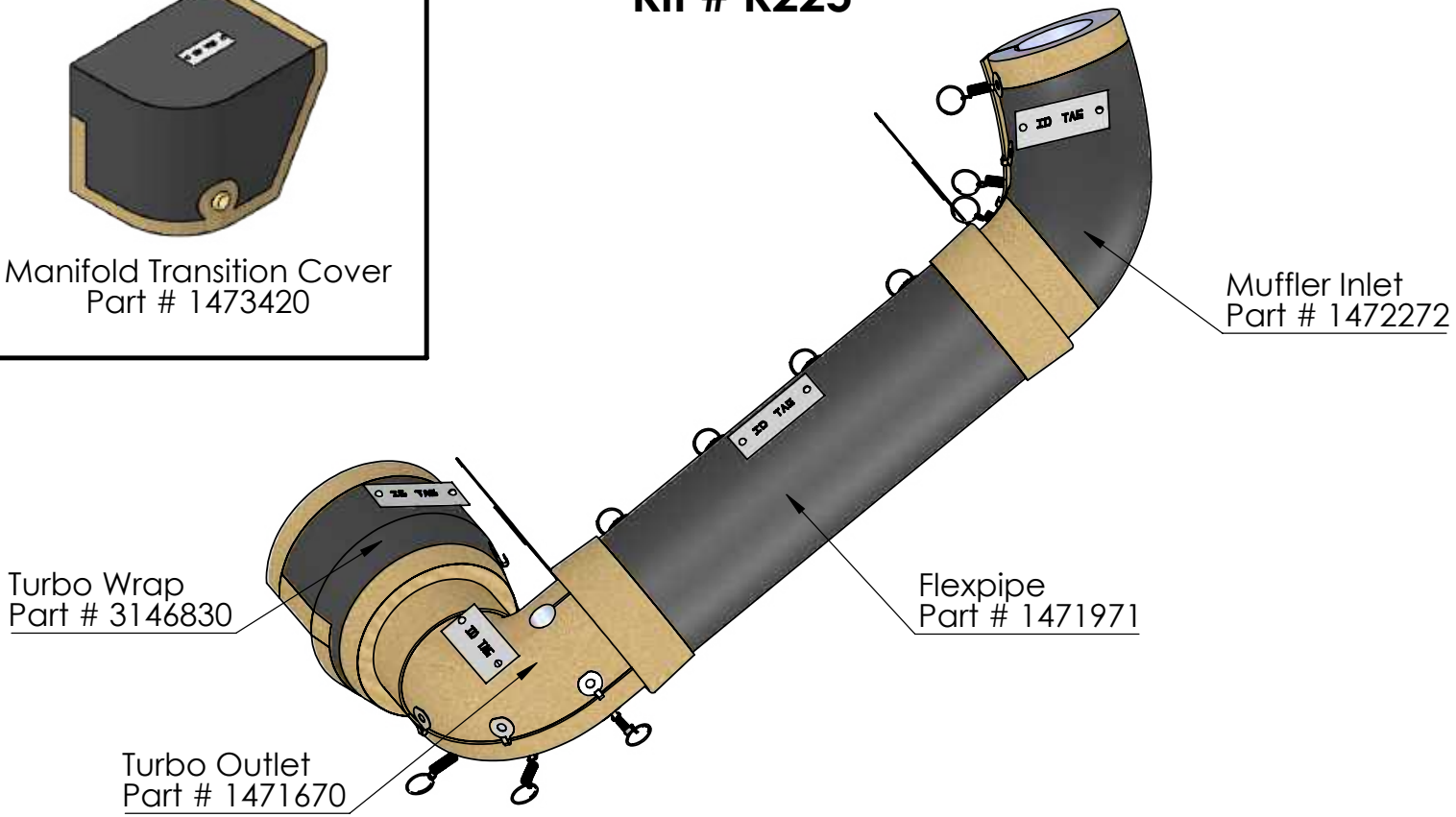

PROPRIETARY AND CONFIDENTIAL
THE INFORMATION HEREON IS THE PROPERTY OF KALB CORP. AND/OR ITS SUBSIDIARIES.
WITHOUT WRITTEN PERMISSION, ANY COPYING, TRANSMITTAL TO OTHERS, AND ANY
USE EXCEPT THAT FOR WHICH IT IS LOANED, IS PROHIBITED

K225

Mack
MRU 633 CNG
Kit # K226

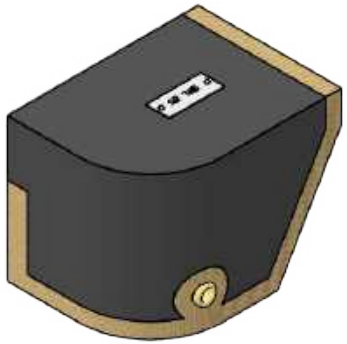

Manifold Transition Cover
Part # 1473420

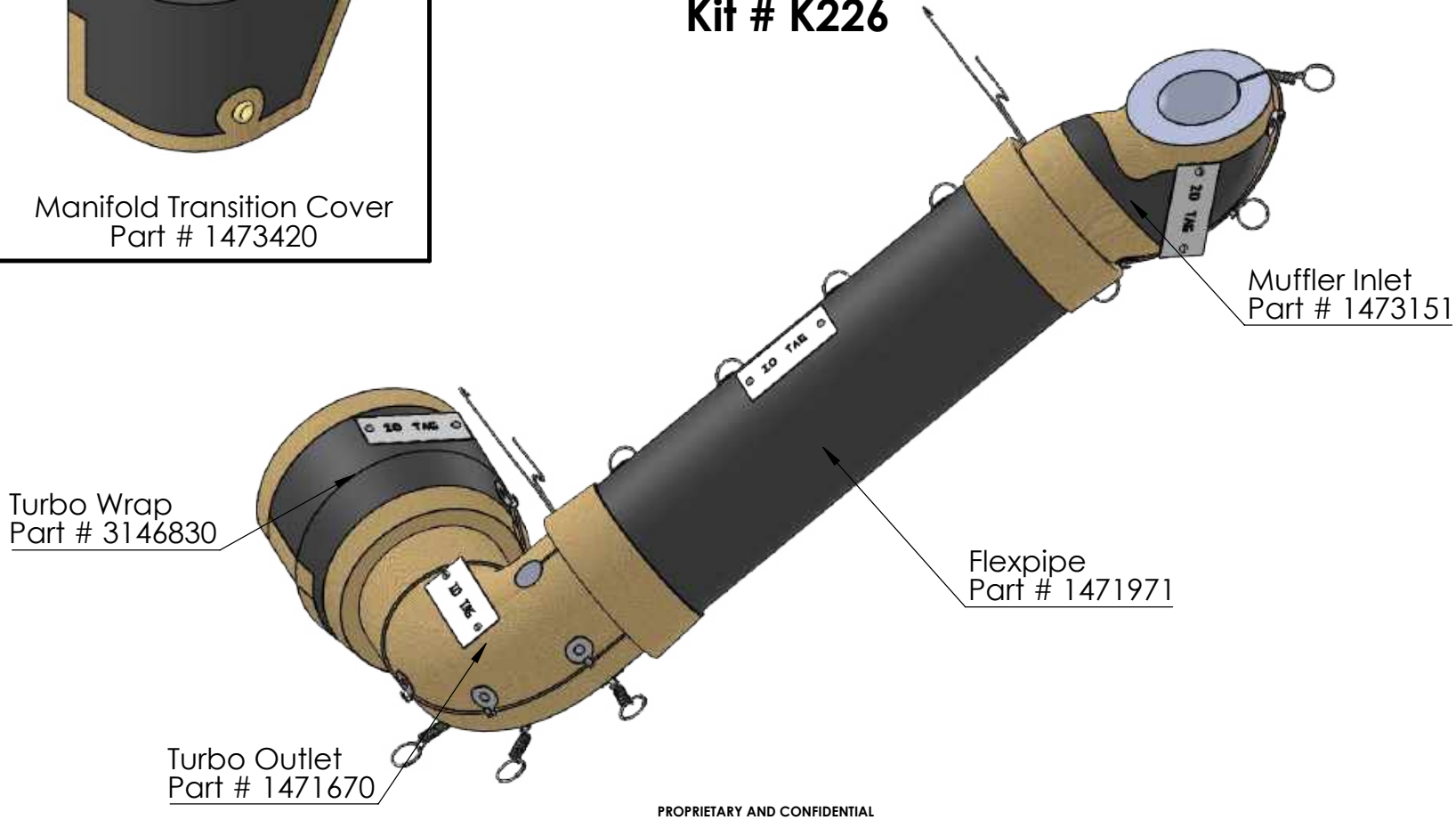

PROPRIETARY AND CONFIDENTIAL
THE INFORMATION HEREON IS THE PROPERTY OF KALB CORP. AND/OR ITS SUBSIDIARIES. WITHOUT WRITTEN PERMISSION, ANY COPYING, TRANSMITTAL TO OTHERS, AND ANY USE EXCEPT THAT FOR WHICH IT IS LOANED, IS PROHIBITED

Kit K226

Mack
MRU 613 Diesel (2010-2012)
Kit # K290

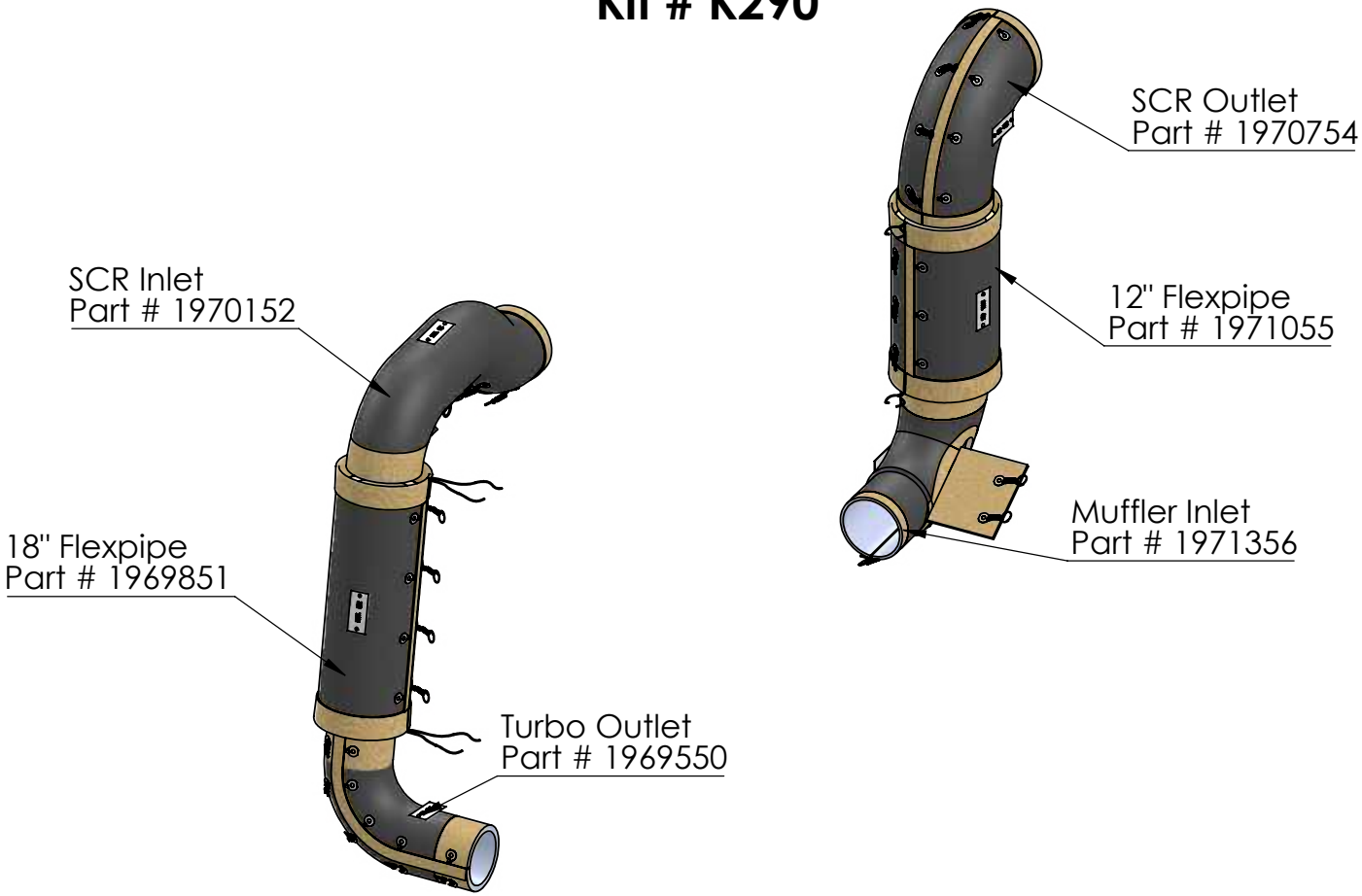

PROPRIETARY AND CONFIDENTIAL
THE INFORMATION HEREON IS THE PROPERTY OF KALB CORP. AND/OR ITS SUBSIDIARIES. WITHOUT WRITTEN PERMISSION, ANY COPYING, TRANSMITTAL TO OTHERS, AND ANY USE EXCEPT THAT FOR WHICH IT IS LOANED, IS PROHIBITED

Kit K290

Mack
MRU/LEU/TE64 613 Diesel (2012-present)
Kit # K293

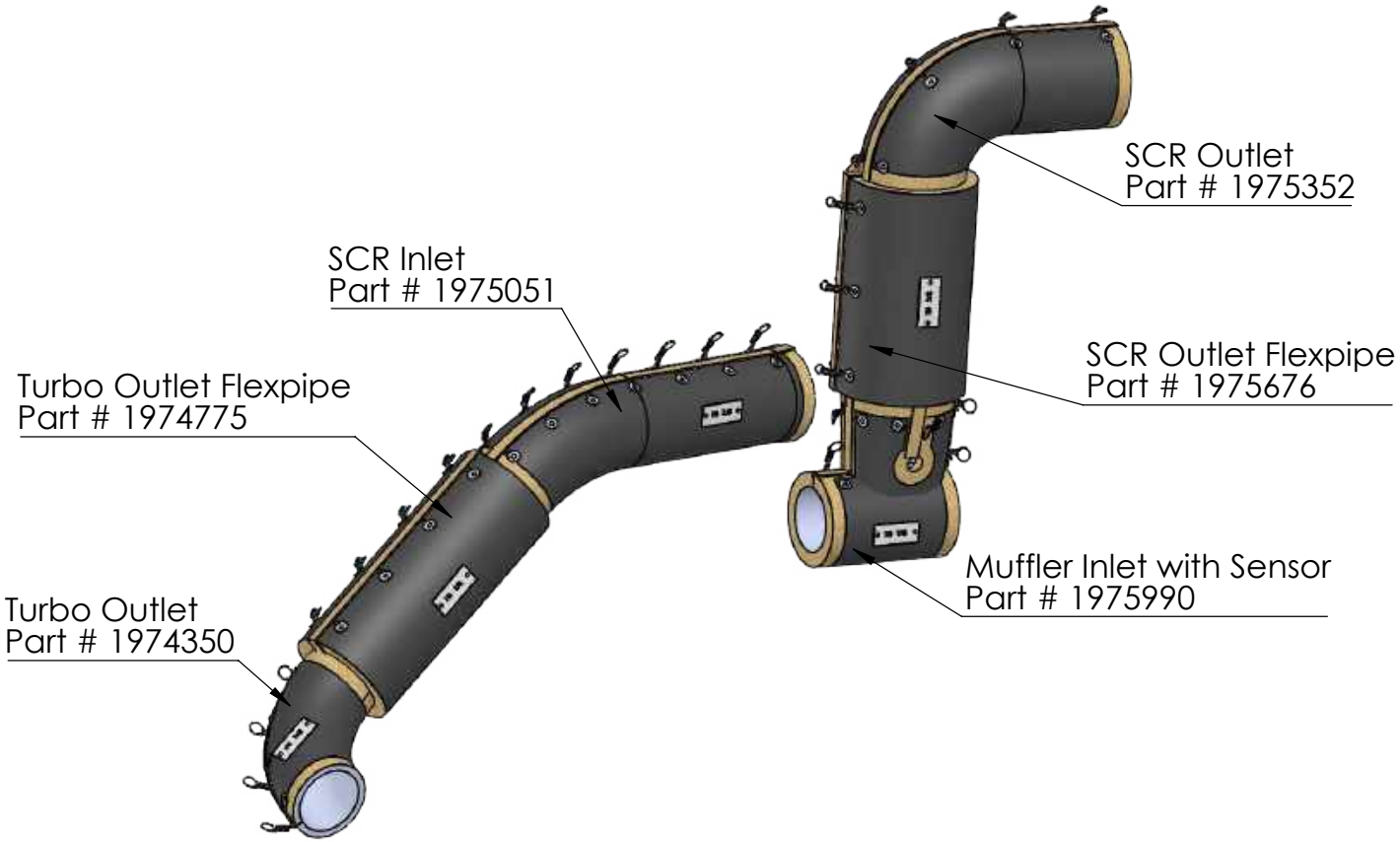

PROPRIETARY AND CONFIDENTIAL
THE INFORMATION HEREON IS THE PROPERTY OF KALB CORP. AND/OR ITS SUBSIDIARIES. WITHOUT WRITTEN PERMISSION, ANY COPYING, TRANSMITTAL TO OTHERS, AND ANY USE EXCEPT THAT FOR WHICH IT IS LOANED, IS PROHIBITED

Kit K293

Mack
LEU 613 Diesel (2010-2012)
Kit # K338

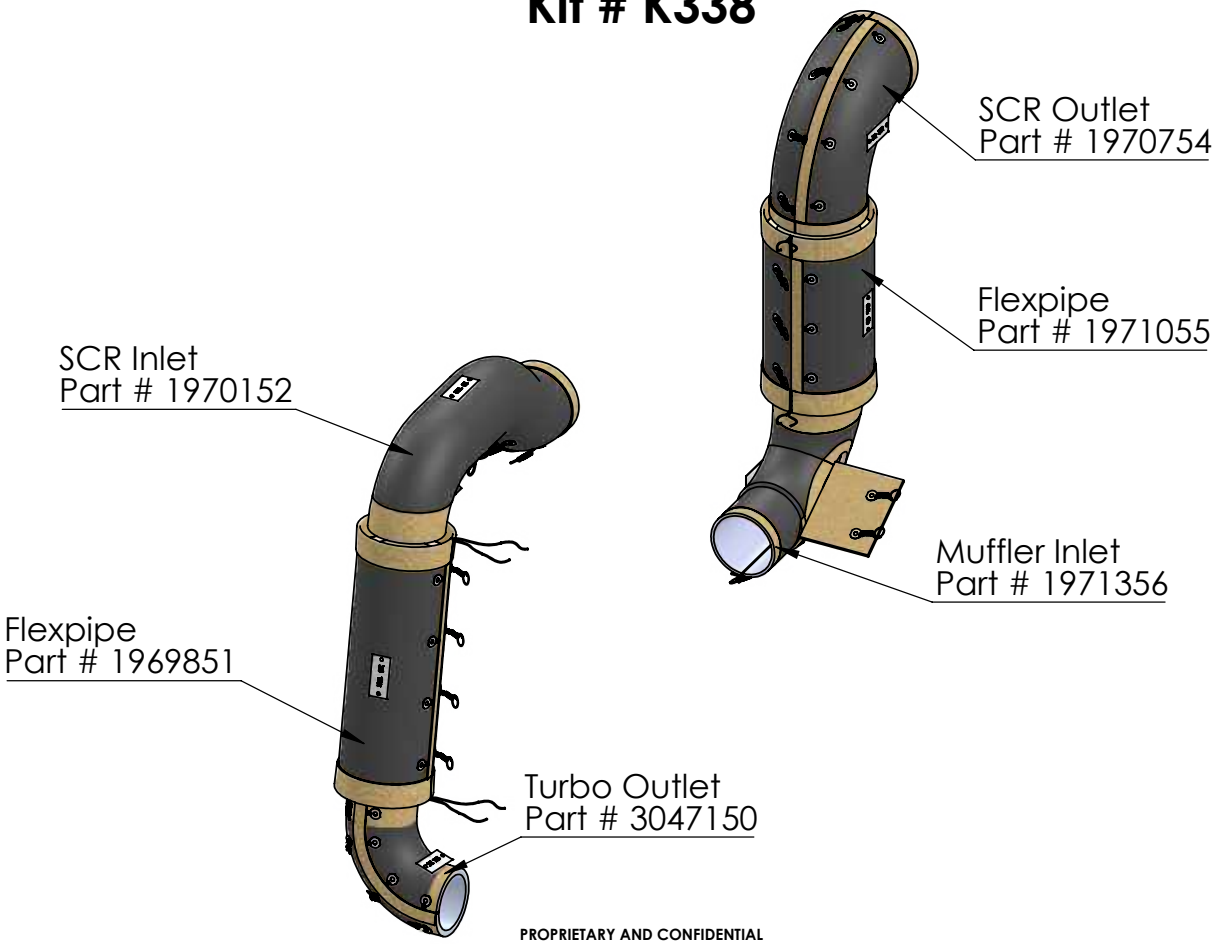

PROPRIETARY AND CONFIDENTIAL
THE INFORMATION HEREON IS THE PROPERTY OF KALB CORP. AND/OR ITS SUBSIDIARIES. WITHOUT WRITTEN PERMISSION, ANY COPYING, TRANSMITTAL TO OTHERS, AND ANY USE EXCEPT THAT FOR WHICH IT IS LOANED, IS PROHIBITED

Kit K338

Mack
TE64E/LR64E
CNG 2019-Present
Kit # K451

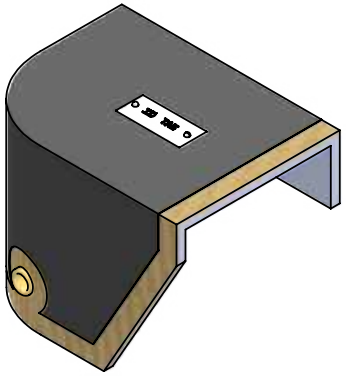

Manifold Transition Cover
Part # 1473420

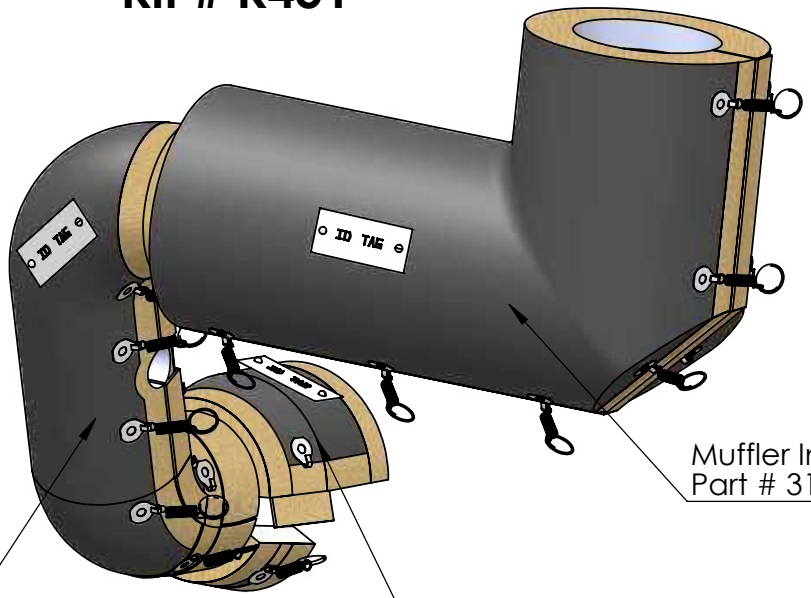

Muffler Inlet Elbow
Part # 3126151

Turbo Outlet Double Elbow
Part # 3125850

Turbo Wrap
Part # 3146830

PROPRIETARY AND CONFIDENTIAL
THE INFORMATION HEREON IS THE PROPERTY OF KALB CORP. AND/OR ITS SUBSIDIARIES. WITHOUT WRITTEN PERMISSION, ANY COPYING, TRANSMITTAL TO OTHERS, AND ANY USE EXCEPT THAT FOR WHICH IT IS LOANED, IS PROHIBITED

Kit K451

Mack
MRU Detroit Diesel Engine
K454

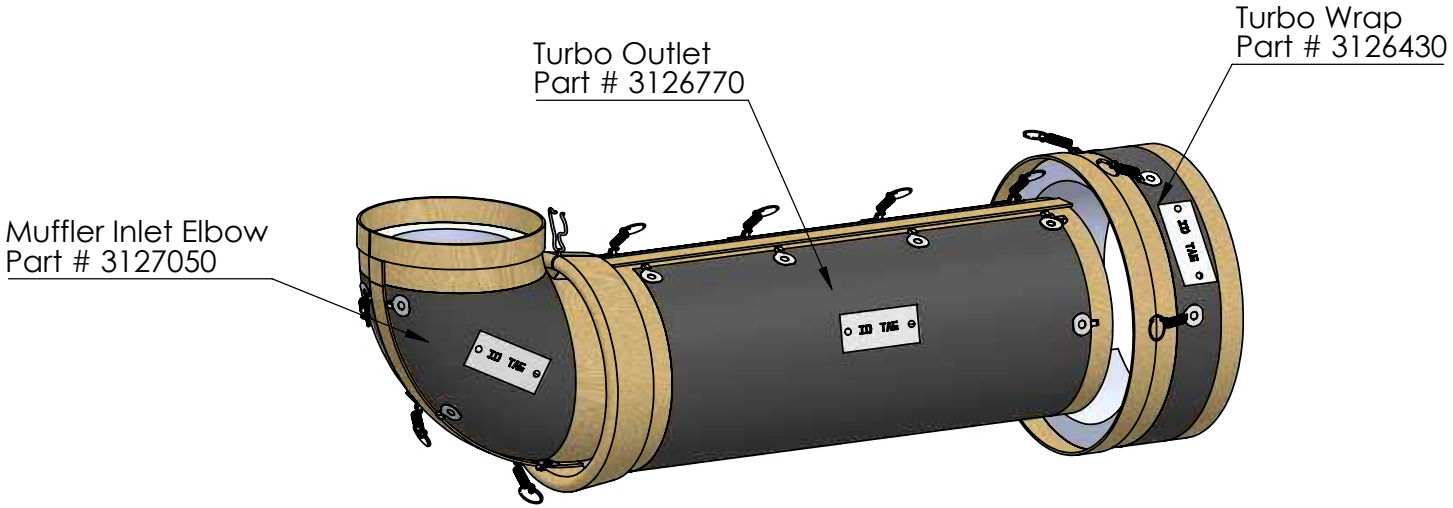

PROPRIETARY AND CONFIDENTIAL
THE INFORMATION HEREON IS THE PROPERTY OF KALB CORP. AND/OR ITS SUBSIDIARIES.
WITHOUT WRITTEN PERMISSION, ANY COPYING, TRANSMITTAL TO OTHERS, AND ANY
USE EXCEPT THAT FOR WHICH IT IS LOANED, IS PROHIBITED

Kit K454

Mack
Granite CV713 (2003-2007)
Kit # K484

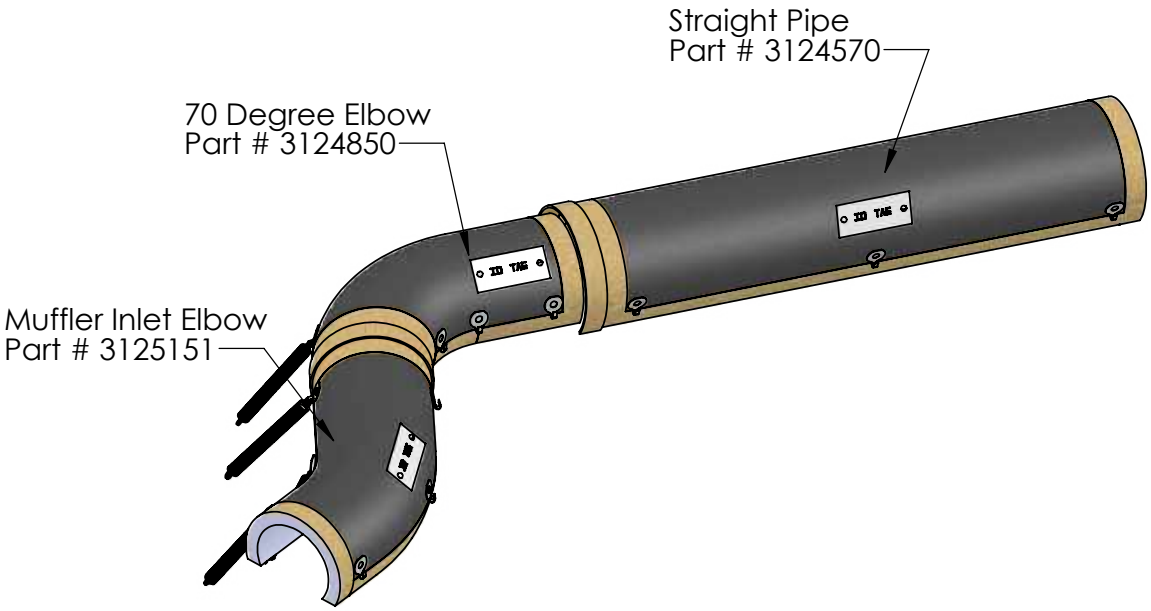

PROPRIETARY AND CONFIDENTIAL
THE INFORMATION HEREON IS THE PROPERTY OF KALB CORP. AND/OR ITS SUBSIDIARIES. WITHOUT WRITTEN PERMISSION, ANY COPYING, TRANSMITTAL TO OTHERS, AND ANY USE EXCEPT THAT FOR WHICH IT IS LOANED, IS PROHIBITED

Kit K484

Mack Granite
CV713
Concrete Mixer
Kit # K577

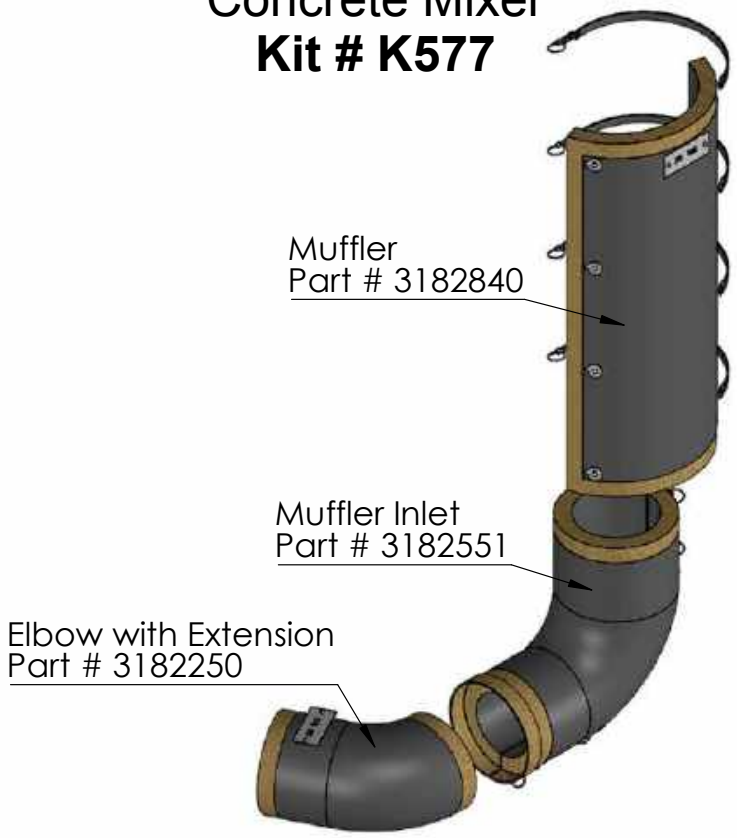

PROPRIETARY AND CONFIDENTIAL
THE INFORMATION HEREON IS THE PROPERTY OF KALB CORP. AND/OR ITS SUBSIDIARIES.
WITHOUT WRITTEN PERMISSION, ANY COPYING, TRANSMITTAL TO OTHERS, AND ANY USE
EXCEPT THAT FOR WHICH IT IS LOANED, IS PROHIBITED

WARNING
K577

AutoCar Truck Insulation Kits

Autocar
Right Hand Vertical CNG 9L
Kit # K112

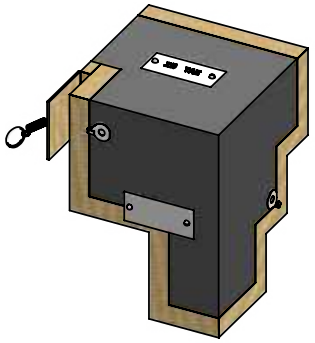

Manifold Transition Cover
Part # 3147410

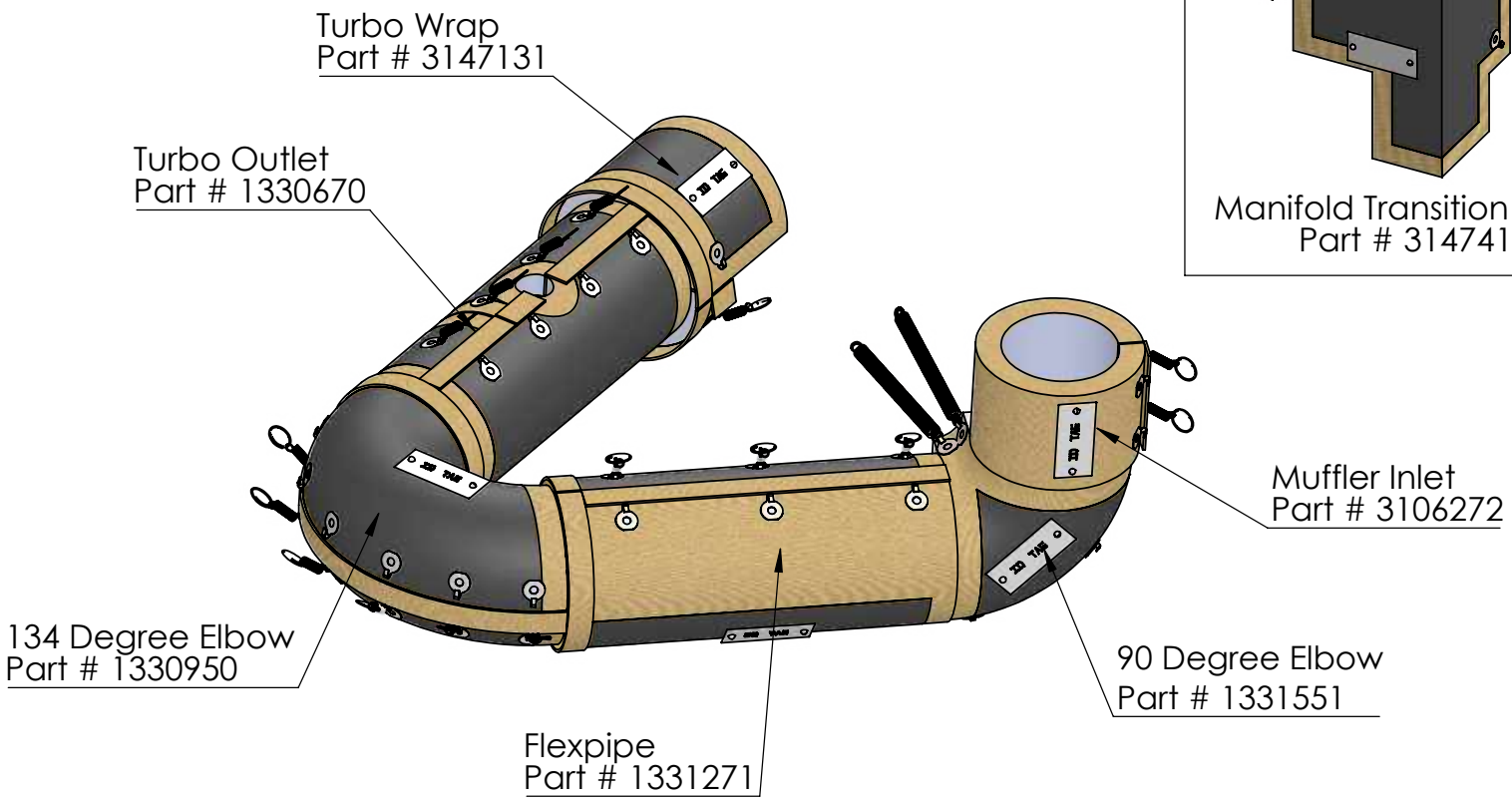

PROPRIETARY AND CONFIDENTIAL
THE INFORMATION HEREON IS THE PROPERTY OF KALB CORP. AND/OR ITS SUBSIDIARIES. WITHOUT WRITTEN PERMISSION, ANY COPYING, TRANSMITTAL TO OTHERS, AND ANY USE EXCEPT THAT FOR WHICH IT IS LOANED, IS PROHIBITED

Kit K112

NEXTRAN® TRUCK CENTERS

Autocar
Left Hand Vertical
CNG

Kit # K113

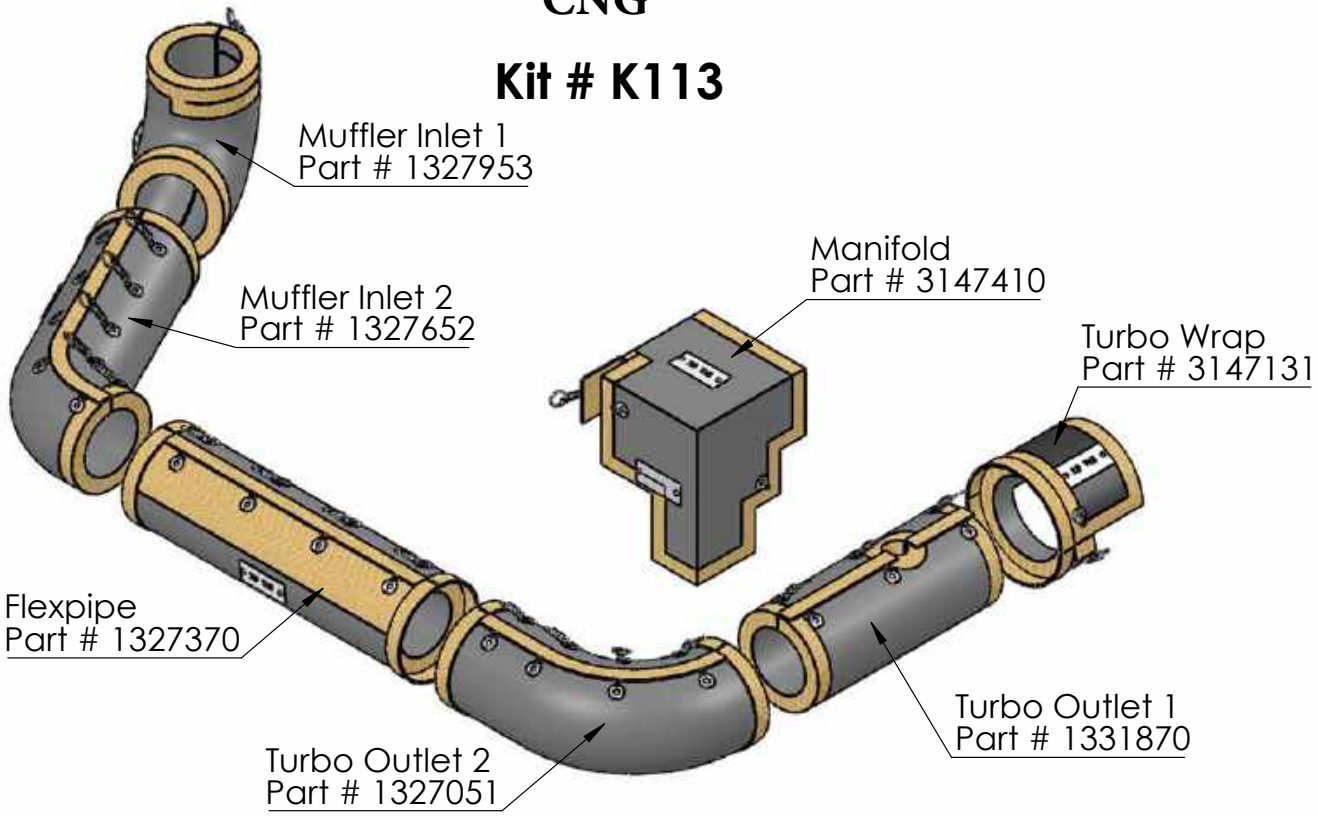

PROPRIETARY AND CONFIDENTIAL
THE INFORMATION HEREON IS THE PROPERTY OF KALB CORP. AND/OR ITS SUBSIDIARIES.
WITHOUT WRITTEN PERMISSION, ANY COPYING, TRANSMITTAL TO OTHERS, AND ANY USE
EXCEPT THAT FOR WHICH IT IS LOANED, IS PROHIBITED

Kit K113

Autocar
ACX CNG 9L (2018)
Kit # K146

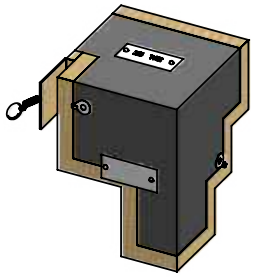

Manifold Transition Cover
Part # 3147410

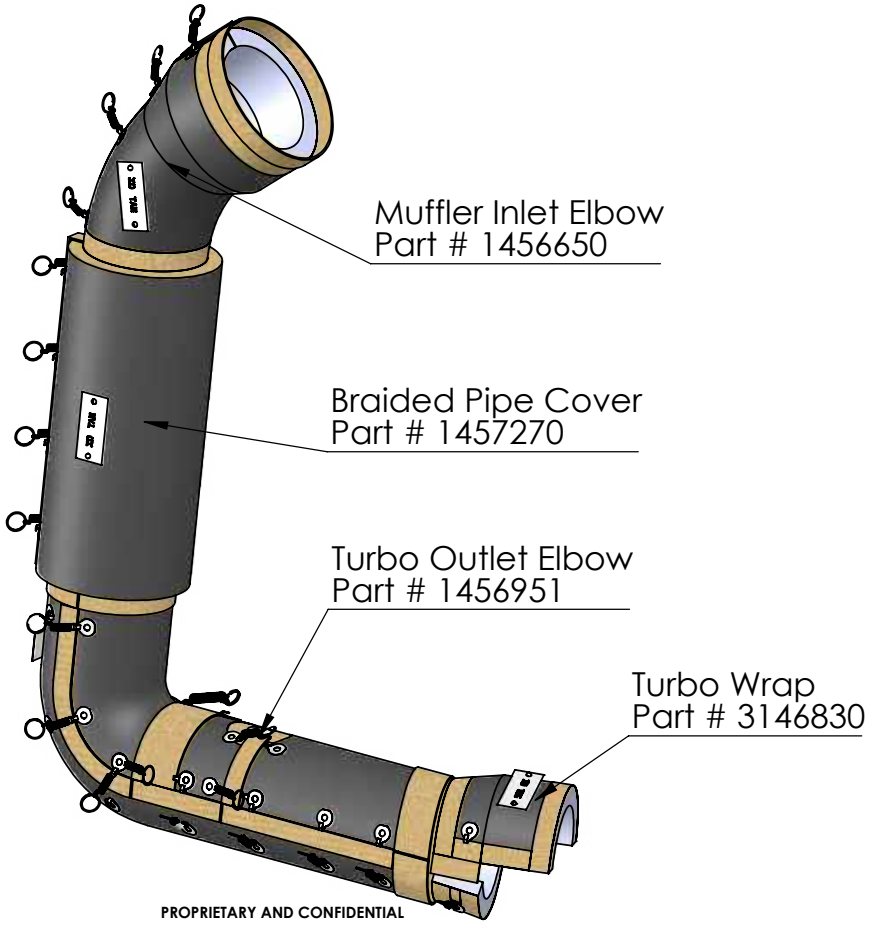

PROPRIETARY AND CONFIDENTIAL
THE INFORMATION HEREON IS THE PROPERTY OF KALB CORP. AND/OR ITS SUBSIDIARIES. WITHOUT WRITTEN PERMISSION, ANY COPYING, TRANSMITTAL TO OTHERS, AND ANY USE EXCEPT THAT FOR WHICH IT IS LOANED, IS PROHIBITED

Kit K146

Autocar
WX Diesel (2008)
Kit # K364

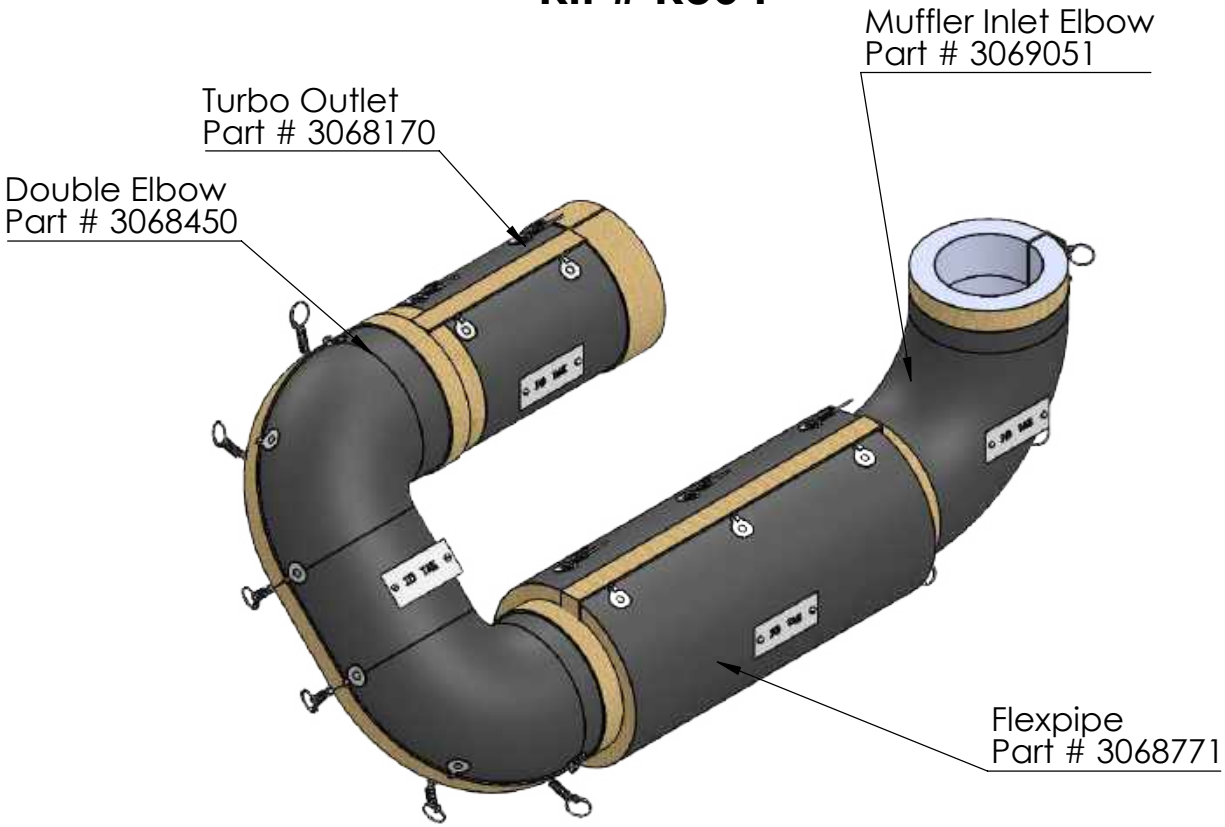

PROPRIETARY AND CONFIDENTIAL
THE INFORMATION HEREON IS THE PROPERTY OF KALB CORP. AND/OR ITS SUBSIDIARIES. WITHOUT WRITTEN PERMISSION, ANY COPYING, TRANSMITTAL TO OTHERS, AND ANY USE EXCEPT THAT FOR WHICH IT IS LOANED, IS PROHIBITED

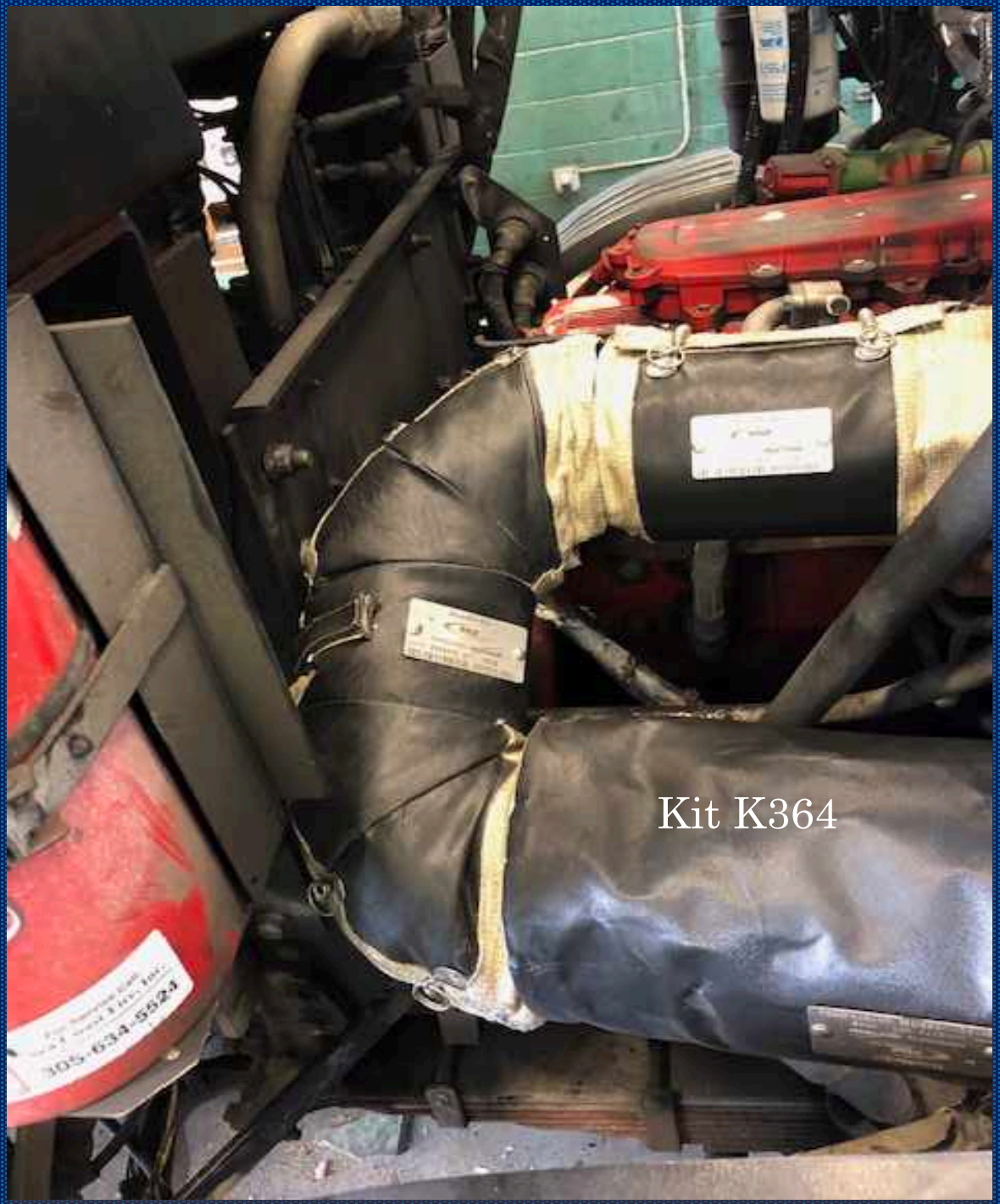
Kit K364

Autocar
ACX CNG Side Loader (2018)
Kit # K367

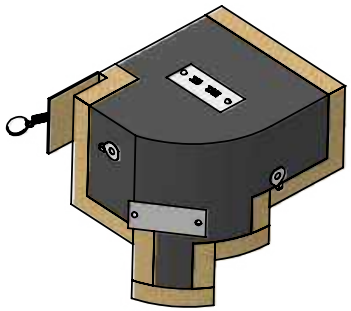

Manifold Transition Cover
Part # 3150410

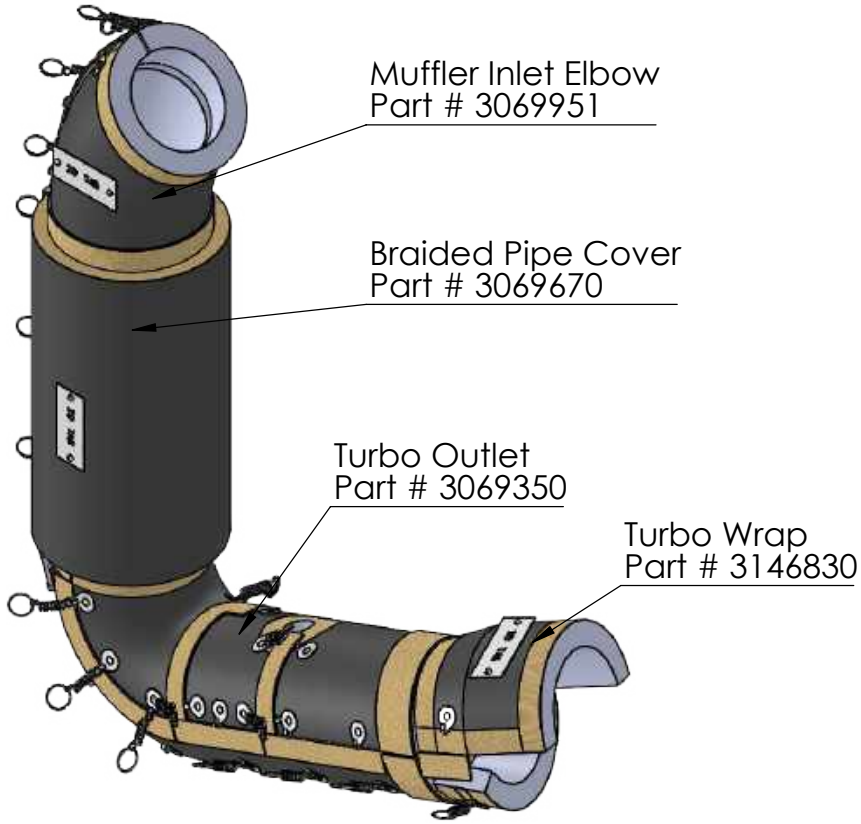

PROPRIETARY AND CONFIDENTIAL
THE INFORMATION HEREON IS THE PROPERTY OF KALB CORP. AND/OR ITS SUBSIDIARIES.
WITHOUT WRITTEN PERMISSION, ANY COPYING, TRANSMITTAL TO OTHERS, AND ANY
USE EXCEPT THAT FOR WHICH IT IS LOANED, IS PROHIBITED

Kit K367

Autocar
WX64 Diesel
Kit # K370

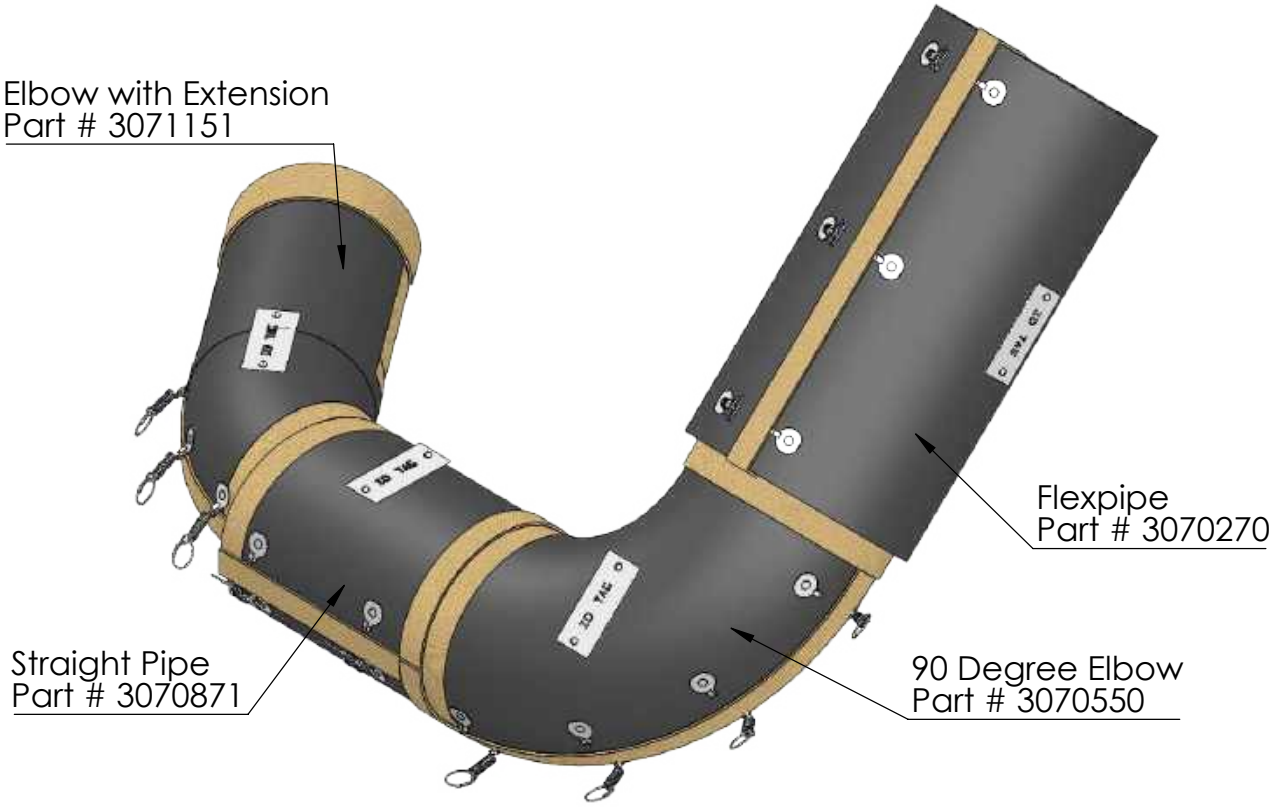

PROPRIETARY AND CONFIDENTIAL
THE INFORMATION HEREON IS THE PROPERTY OF KALB CORP. AND/OR ITS SUBSIDIARIES. WITHOUT WRITTEN PERMISSION, ANY COPYING, TRANSMITTAL TO OTHERS, AND ANY USE EXCEPT THAT FOR WHICH IT IS LOANED, IS PROHIBITED

Kit K370

Autocar
WX Diesel 2007
Kit # K376

PROPRIETARY AND CONFIDENTIAL
THE INFORMATION HEREON IS THE PROPERTY OF KALB CORP. AND/OR ITS SUBSIDIARIES. WITHOUT WRITTEN PERMISSION, ANY COPYING, TRANSMITTAL TO OTHERS, AND ANY USE EXCEPT THAT FOR WHICH IT IS LOANED, IS PROHIBITED

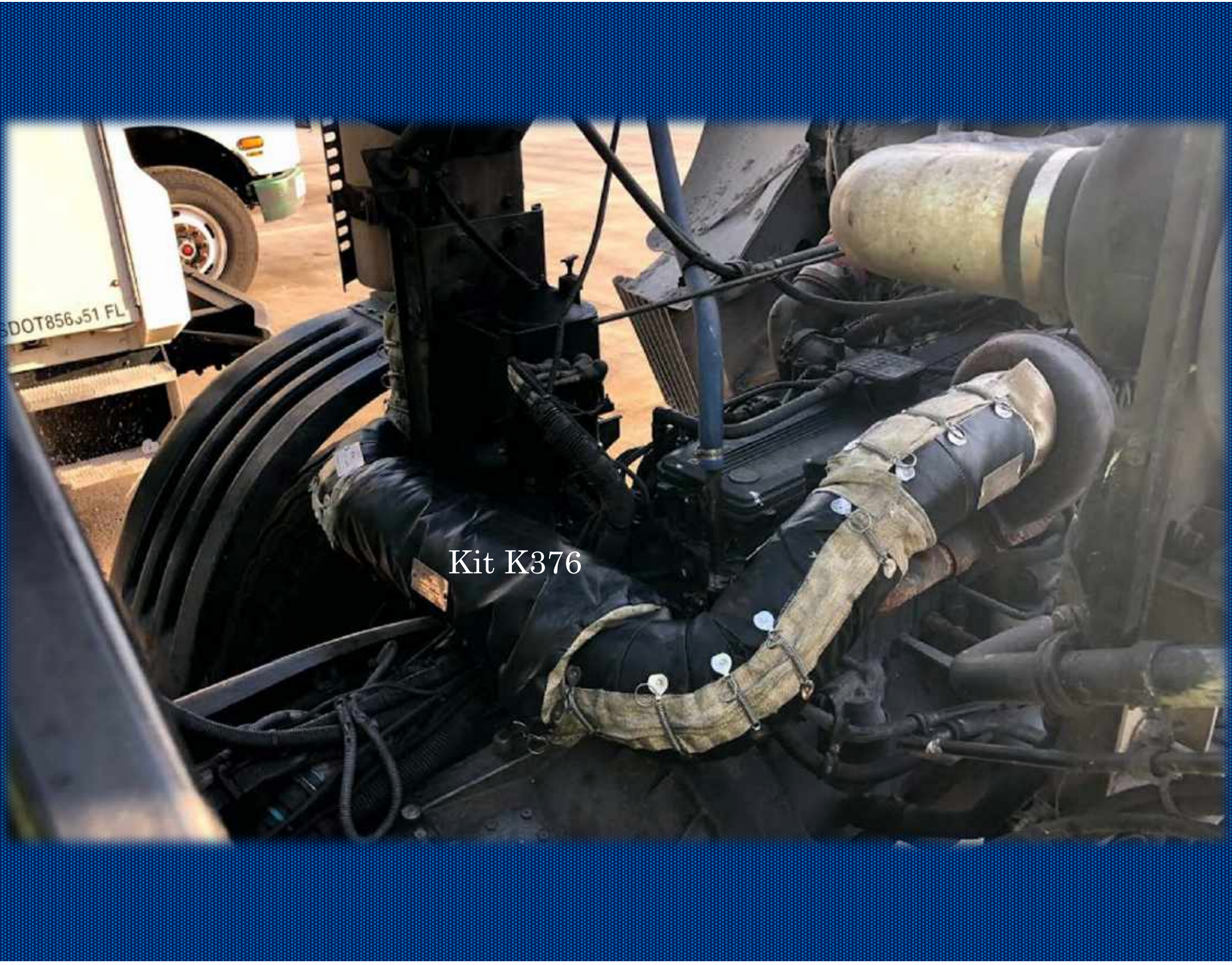
Kit K376

Autocar
CNG ACX ISX12 (2017)
Kit # K402

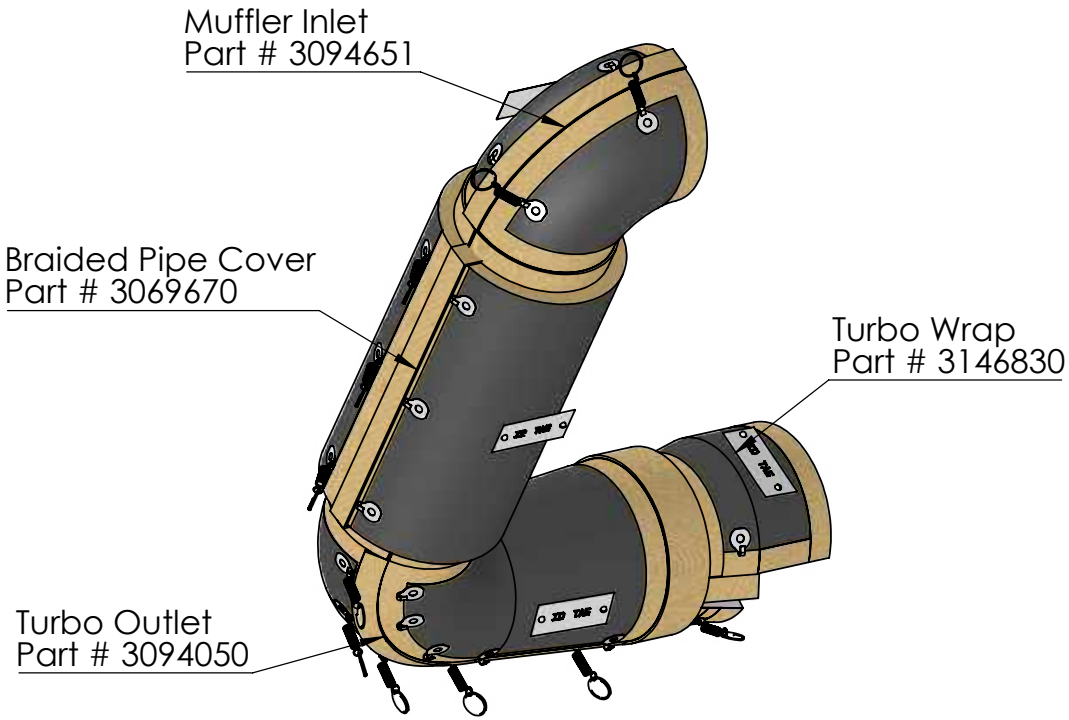

PROPRIETARY AND CONFIDENTIAL
THE INFORMATION HEREON IS THE PROPERTY OF KALB CORP. AND/OR ITS SUBSIDIARIES.
WITHOUT WRITTEN PERMISSION, ANY COPYING, TRANSMITTAL TO OTHERS, AND ANY
USE EXCEPT THAT FOR WHICH IT IS LOANED, IS PROHIBITED

Kit K402

Autocar
ISM 2007 Diesel (2007)
K417

PROPRIETARY AND CONFIDENTIAL
THE INFORMATION HEREON IS THE PROPERTY OF KALB CORP. AND/OR ITS SUBSIDIARIES. WITHOUT WRITTEN PERMISSION, ANY COPYING, TRANSMITTAL TO OTHERS, AND ANY USE EXCEPT THAT FOR WHICH IT IS LOANED, IS PROHIBITED

Kit K417

Autocar
WXLL 12L Diesel (2009)
Kit # K420

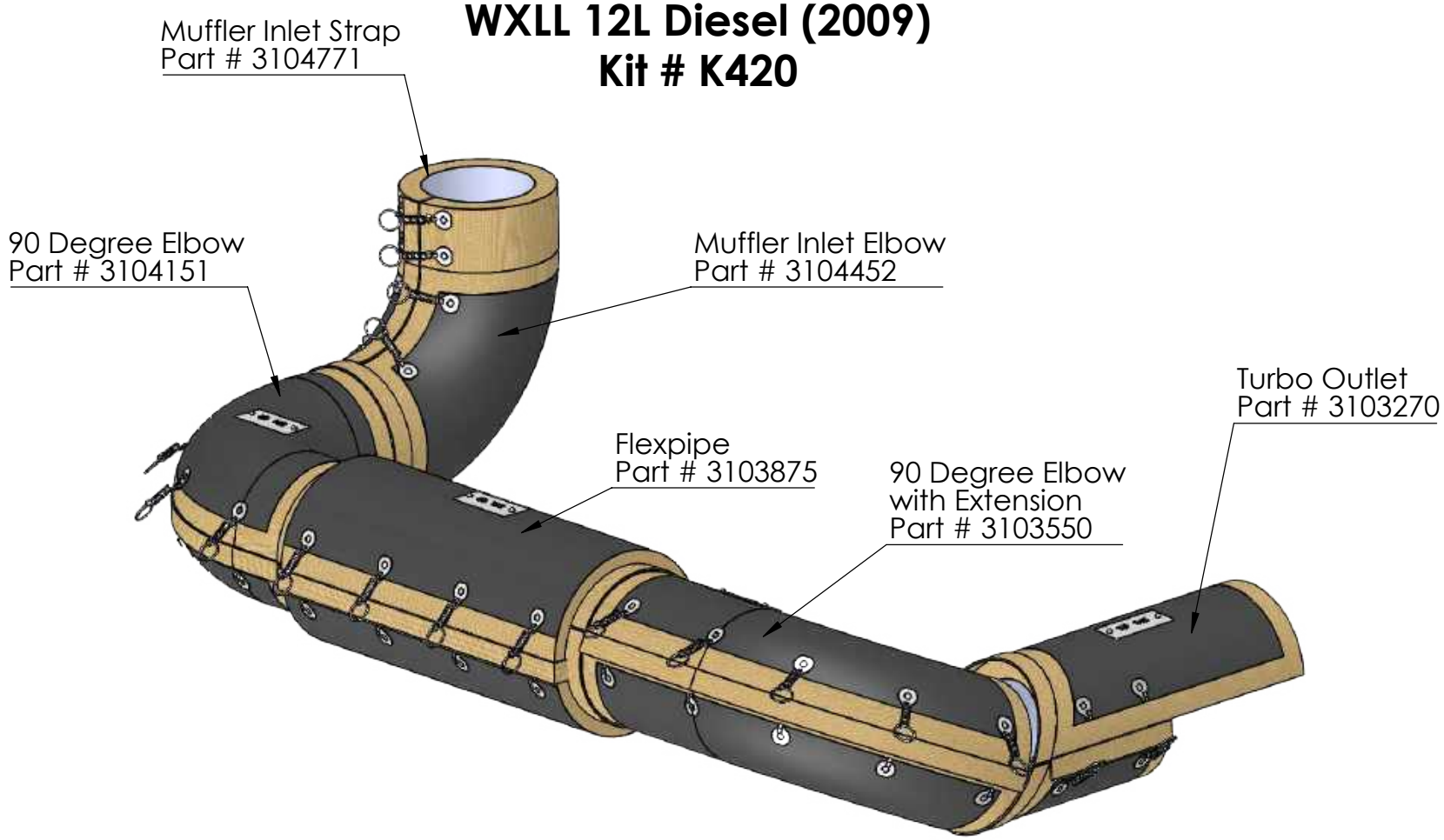

PROPRIETARY AND CONFIDENTIAL
THE INFORMATION HEREON IS THE PROPERTY OF KALB CORP. AND/OR ITS SUBSIDIARIES. WITHOUT WRITTEN PERMISSION, ANY COPYING, TRANSMITTAL TO OTHERS, AND ANY USE EXCEPT THAT FOR WHICH IT IS LOANED, IS PROHIBITED

Autocar
WX64 Diesel (2005)
Kit # K423

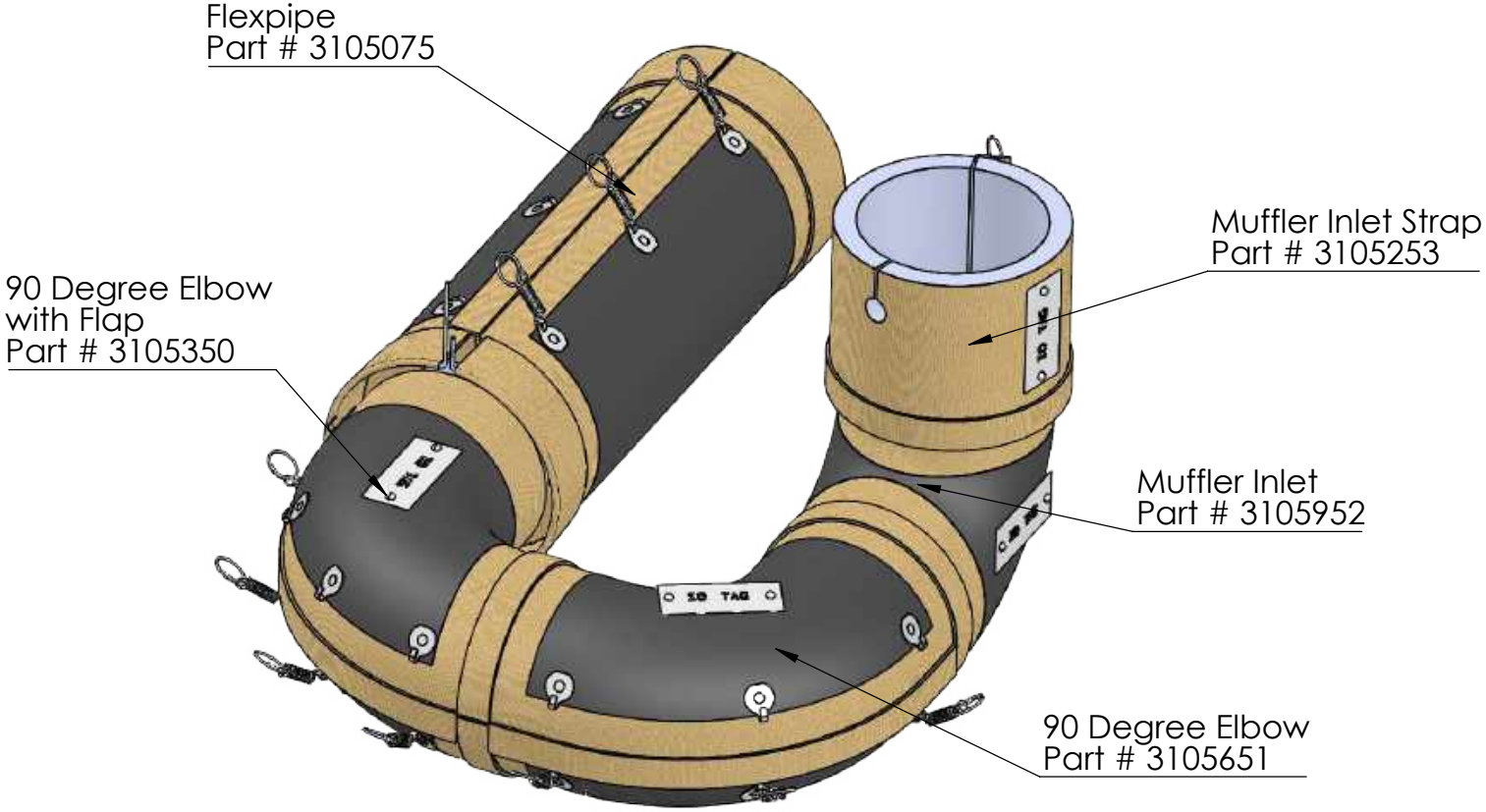

PROPRIETARY AND CONFIDENTIAL
THE INFORMATION HEREON IS THE PROPERTY OF KALB CORP. AND/OR ITS SUBSIDIARIES. WITHOUT WRITTEN PERMISSION, ANY COPYING, TRANSMITTAL TO OTHERS, AND ANY USE EXCEPT THAT FOR WHICH IT IS LOANED, IS PROHIBITED

Kit K423

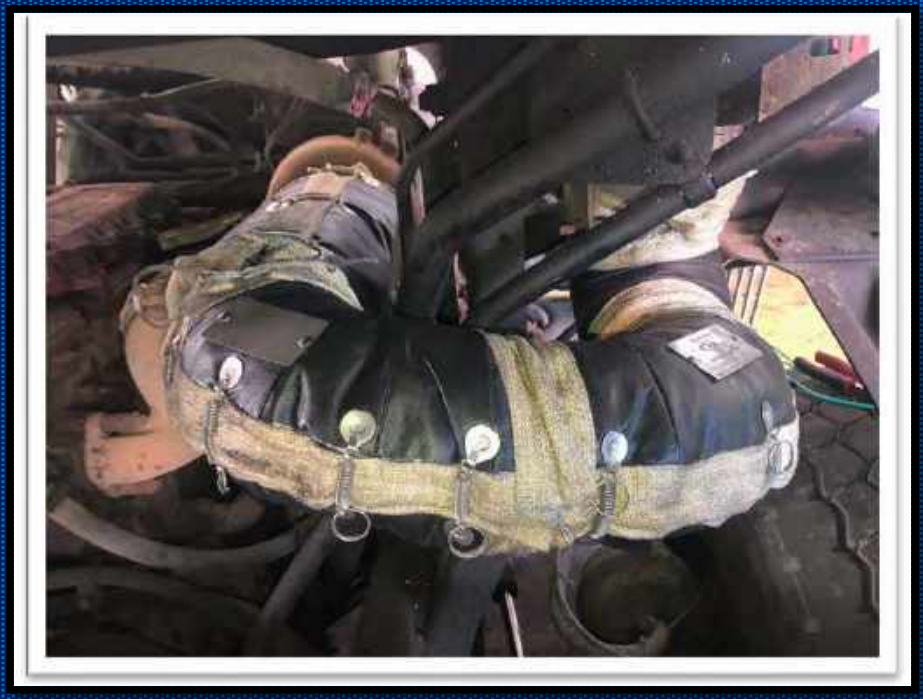

Autocar
ACX64 CNG (2019)
Kit # K444

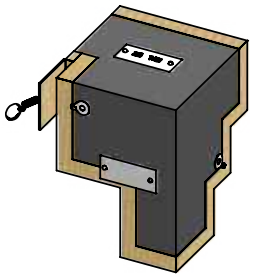

Manifold Transition Cover
Part # 3147410

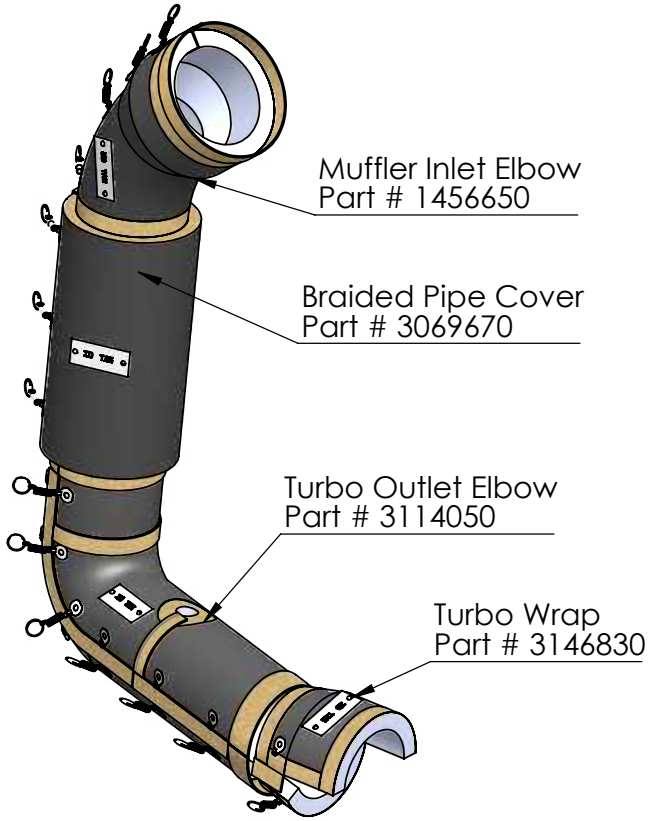

PROPRIETARY AND CONFIDENTIAL
THE INFORMATION HEREON IS THE PROPERTY OF KALB CORP. AND/OR ITS SUBSIDIARIES. WITHOUT WRITTEN PERMISSION, ANY COPYING, TRANSMITTAL TO OTHERS, AND ANY USE EXCEPT THAT FOR WHICH IT IS LOANED, IS PROHIBITED

Kit K444

Autocar
WX Diesel 5" Exhaust (2008)
Kit # K457

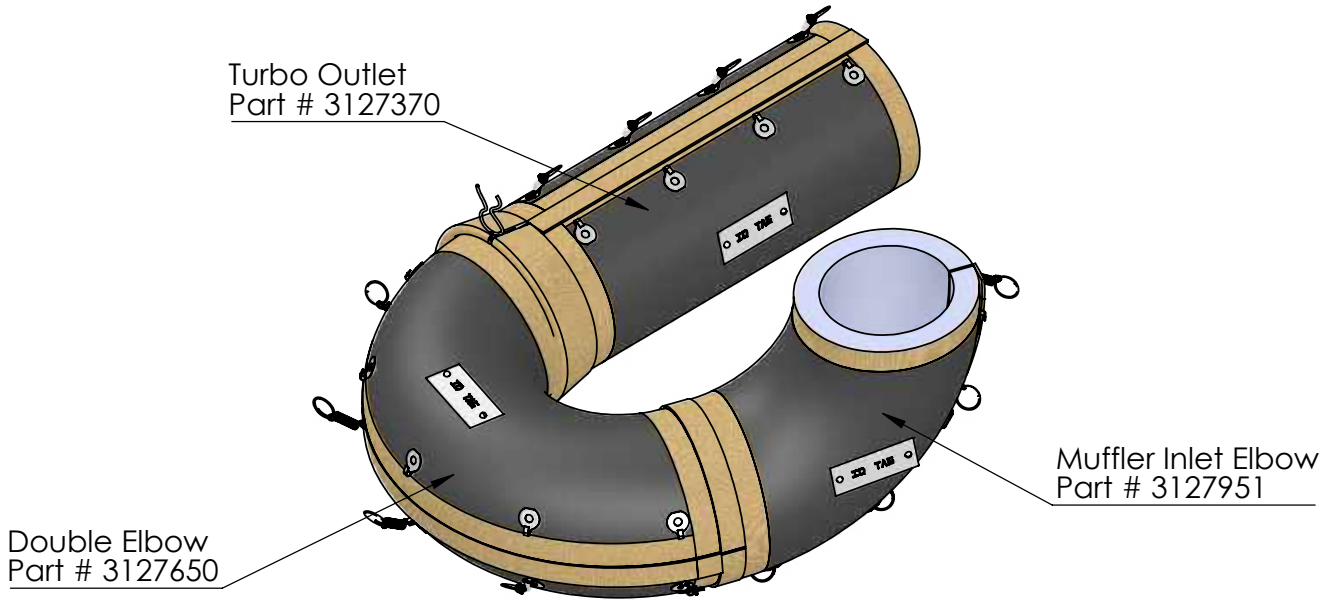

PROPRIETARY AND CONFIDENTIAL
THE INFORMATION HEREON IS THE PROPERTY OF KALB CORP. AND/OR ITS SUBSIDIARIES. WITHOUT WRITTEN PERMISSION, ANY COPYING, TRANSMITTAL TO OTHERS, AND ANY USE EXCEPT THAT FOR WHICH IT IS LOANED, IS PROHIBITED

Autocar
Autocar 2019 ACX CNG
K523

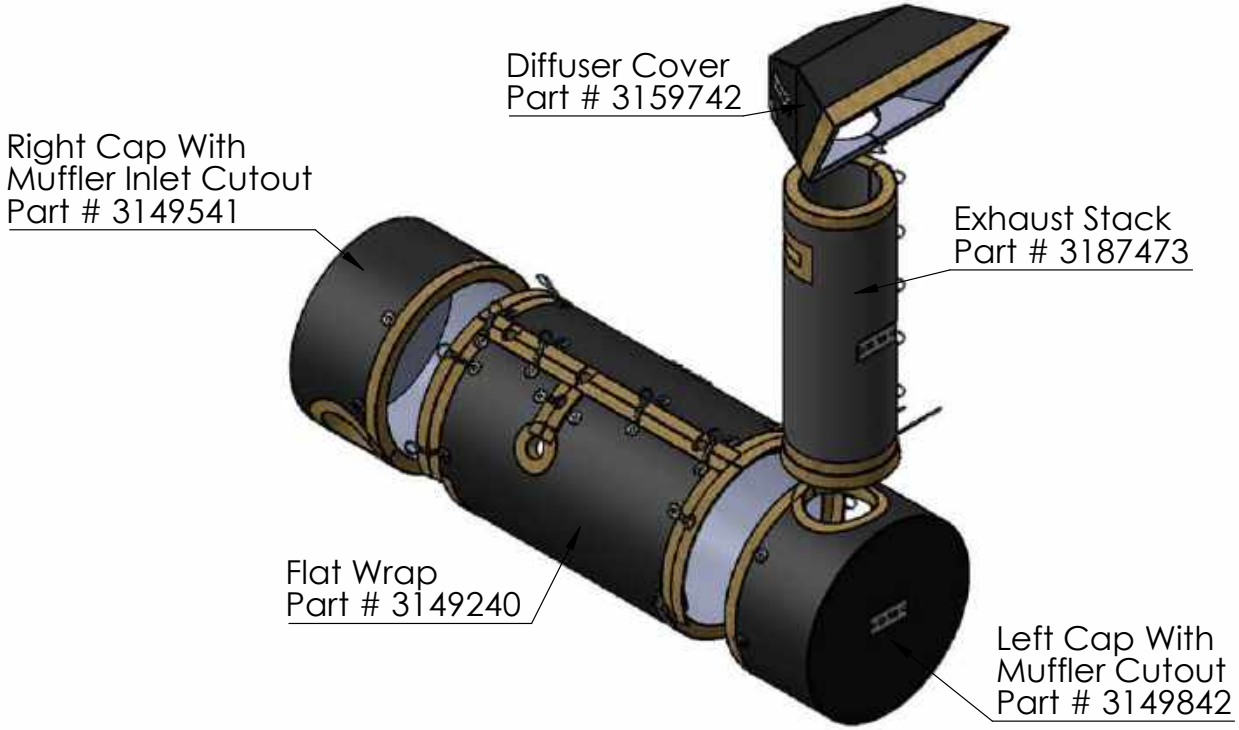

PROPRIETARY AND CONFIDENTIAL
THE INFORMATION HEREON IS THE PROPERTY OF KALB CORP. AND/OR ITS SUBSIDIARIES.
WITHOUT WRITTEN PERMISSION, ANY COPYING, TRANSMITTAL TO OTHERS, AND ANY USE
EXCEPT THAT FOR WHICH IT IS LOANED, IS PROHIBITED

K523

NEXTRAN® TRUCK CENTERS

Autocar
CNG ISX12N (2018)
Kit # K526

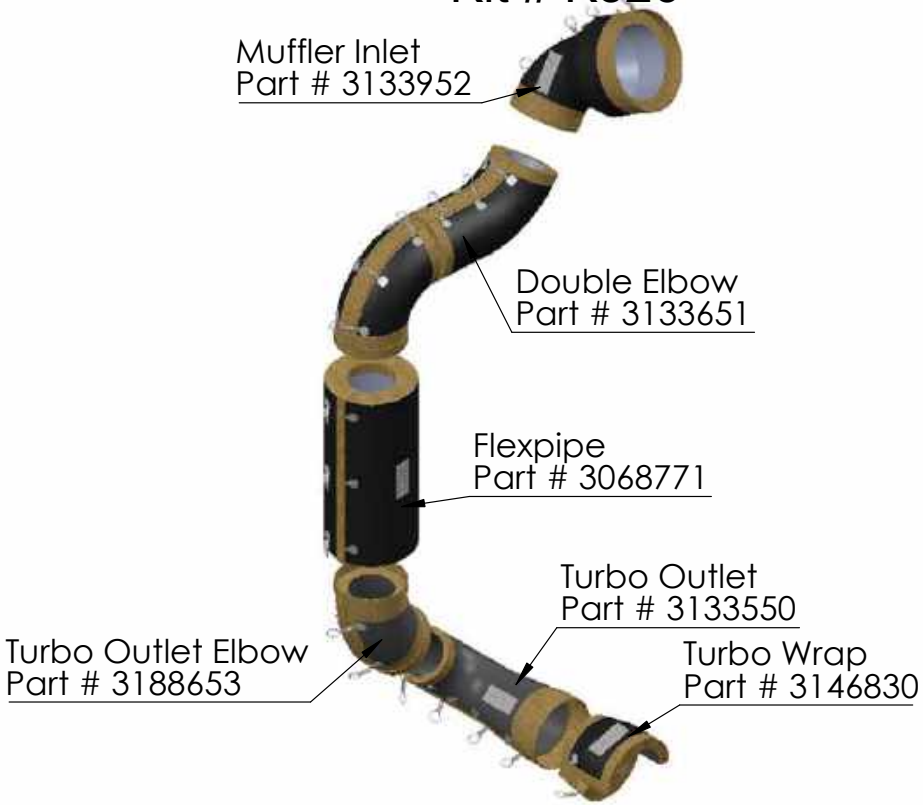

PROPRIETARY AND CONFIDENTIAL
THE INFORMATION HEREON IS THE PROPERTY OF KALB CORP. AND/OR ITS SUBSIDIARIES.
WITHOUT WRITTEN PERMISSION, ANY COPYING, TRANSMITTAL TO OTHERS, AND ANY USE
EXCEPT THAT FOR WHICH IT IS LOANED, IS PROHIBITED

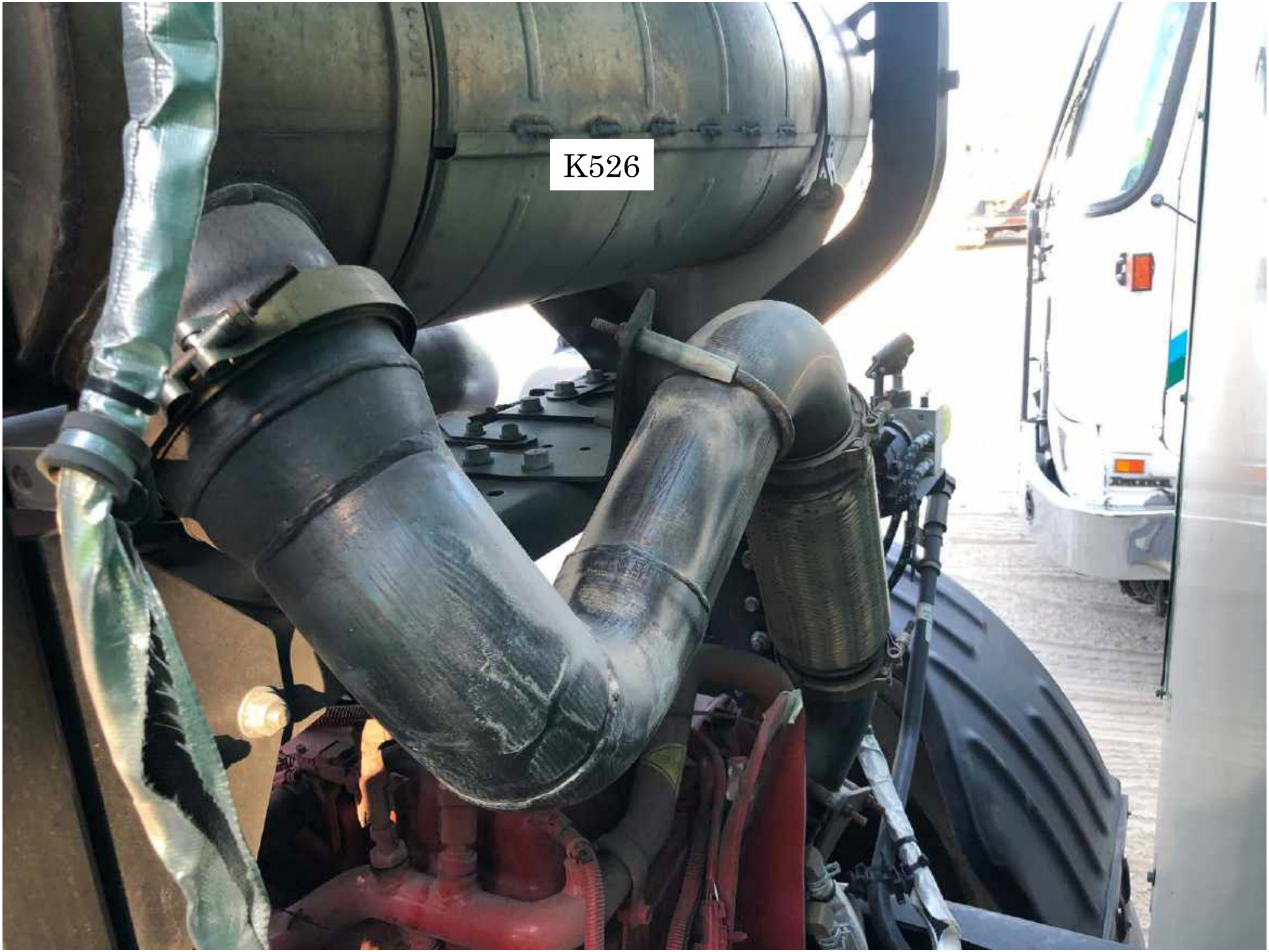
K526

Autocar
9" Patch Part for K367 & K444

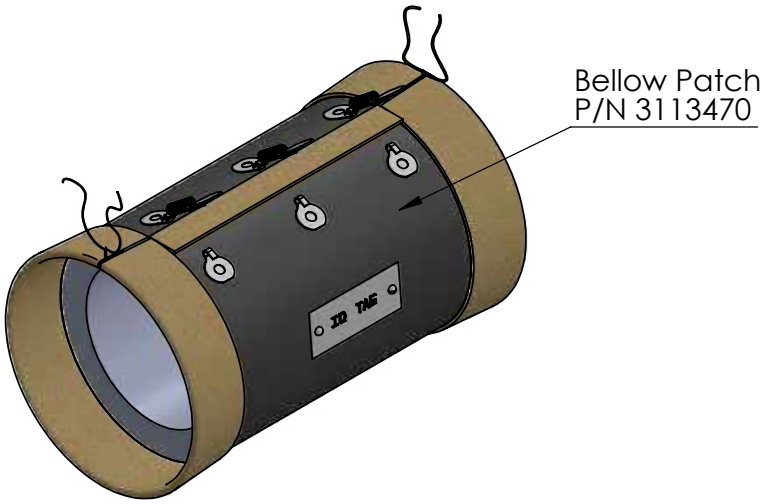

PROPRIETARY AND CONFIDENTIAL
THE INFORMATION HEREON IS THE PROPERTY OF KALB CORP. AND/OR ITS SUBSIDIARIES.
WITHOUT WRITTEN PERMISSION, ANY COPYING, TRANSMITTAL TO OTHERS, AND ANY
USE EXCEPT THAT FOR WHICH IT IS LOANED, IS PROHIBITED

Autocar
13" Patch

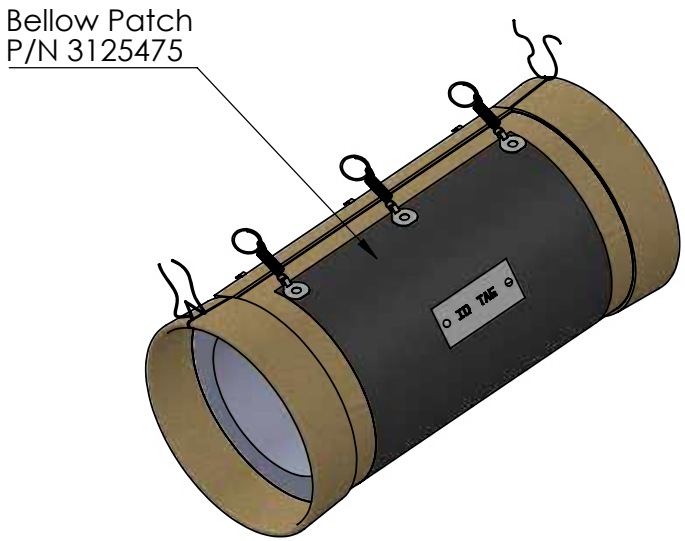

PROPRIETARY AND CONFIDENTIAL
THE INFORMATION HEREON IS THE PROPERTY OF KALB CORP. AND/OR ITS SUBSIDIARIES.
WITHOUT WRITTEN PERMISSION, ANY COPYING, TRANSMITTAL TO OTHERS, AND ANY
USE EXCEPT THAT FOR WHICH IT IS LOANED, IS PROHIBITED

This Vehicle
Runs on Clean,
U.S. Produced
Natural Gas
BBB

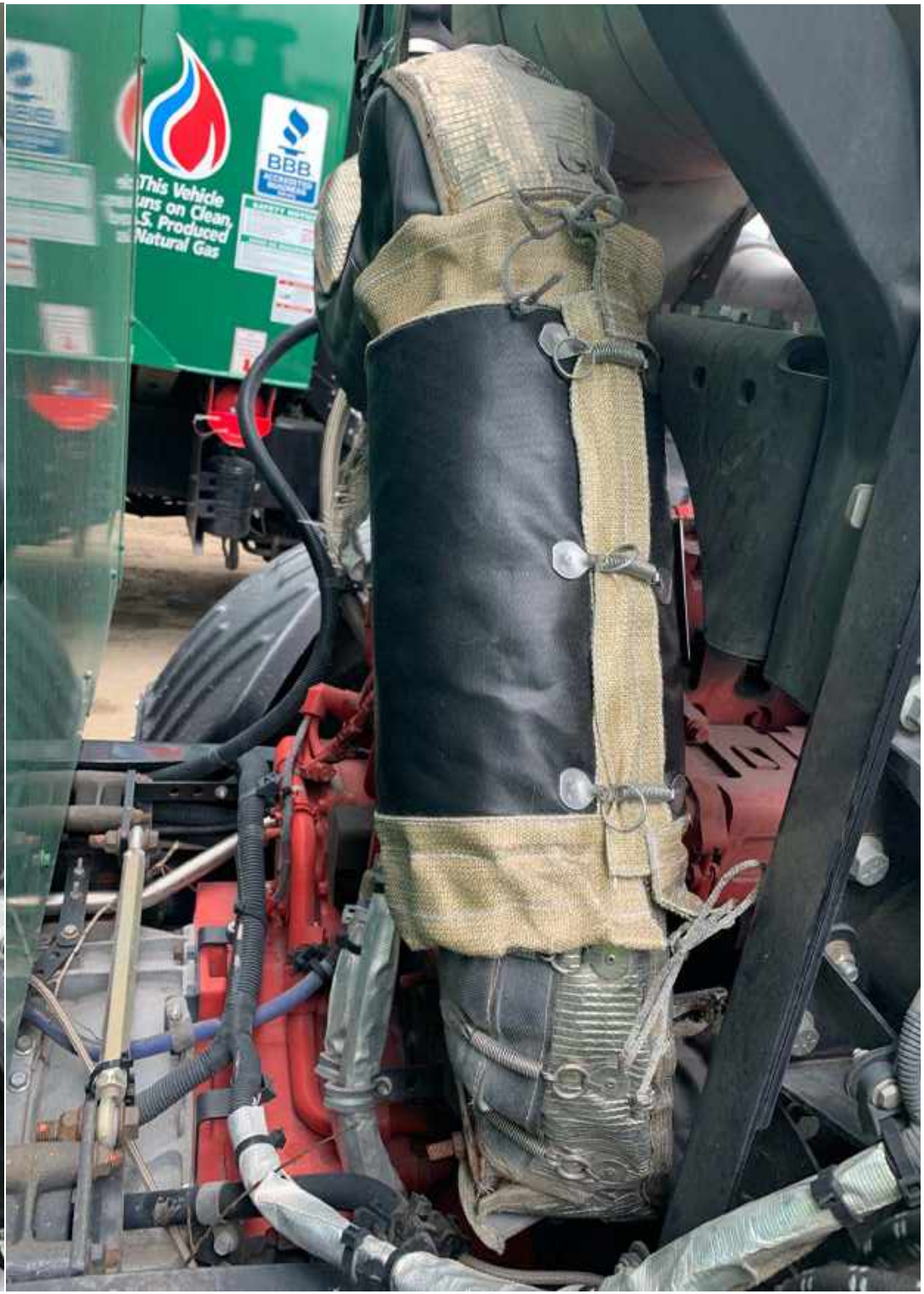
This Vehicle
uns on Clean,
.S. Produced
Natural Gas
BBB

Autocar
2019 CNG ACX Front Loader
Heat Shield

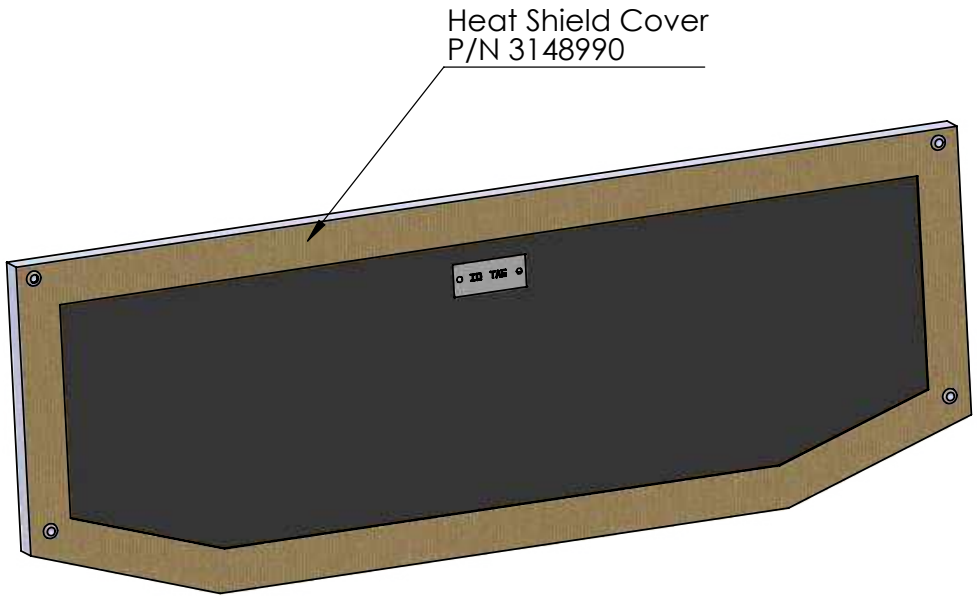

PROPRIETARY AND CONFIDENTIAL
THE INFORMATION HEREON IS THE PROPERTY OF KALB CORP. AND/OR ITS SUBSIDIARIES.
WITHOUT WRITTEN PERMISSION, ANY COPYING, TRANSMITTAL TO OTHERS, AND ANY
USE EXCEPT THAT FOR WHICH IT IS LOANED, IS PROHIBITED

312900
CNG

Autocar
ACX CNG L9N (2019)
Kit # K553

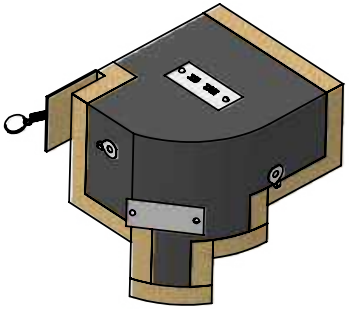

Manifold Transition Cover
Part # 3150410

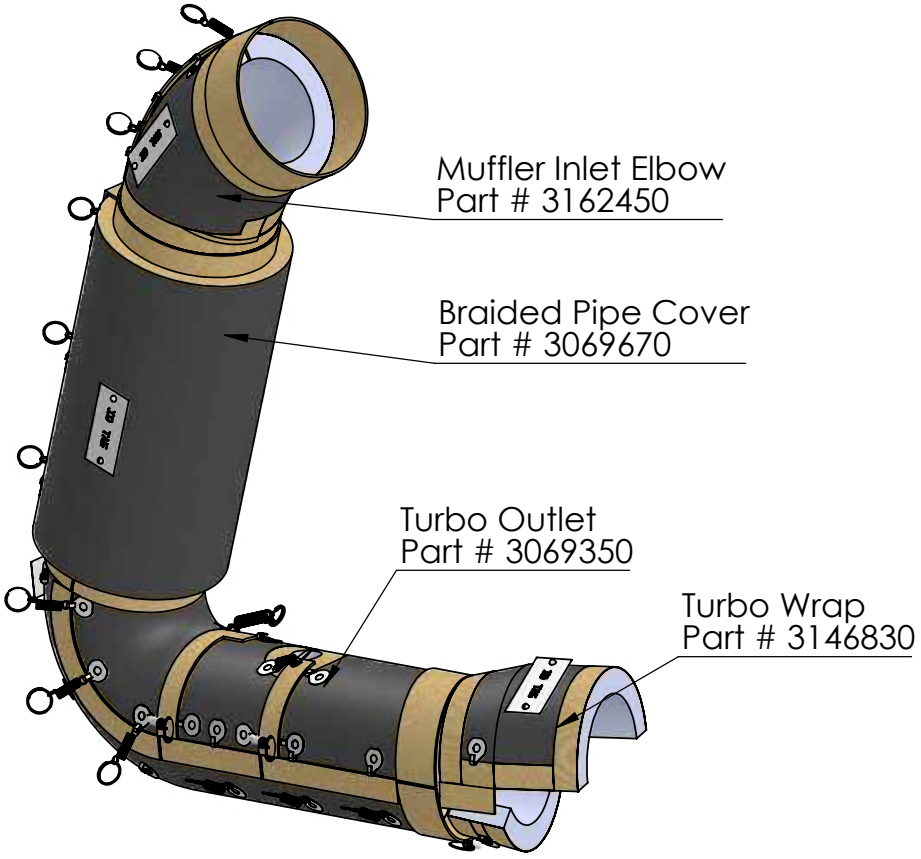

PROPRIETARY AND CONFIDENTIAL
THE INFORMATION HEREON IS THE PROPERTY OF KALB CORP. AND/OR ITS SUBSIDIARIES. WITHOUT WRITTEN PERMISSION, ANY COPYING, TRANSMITTAL TO OTHERS, AND ANY USE EXCEPT THAT FOR WHICH IT IS LOANED, IS PROHIBITED

K553

Autocar
ACX64 CNG (2019)
Diffuser Cover

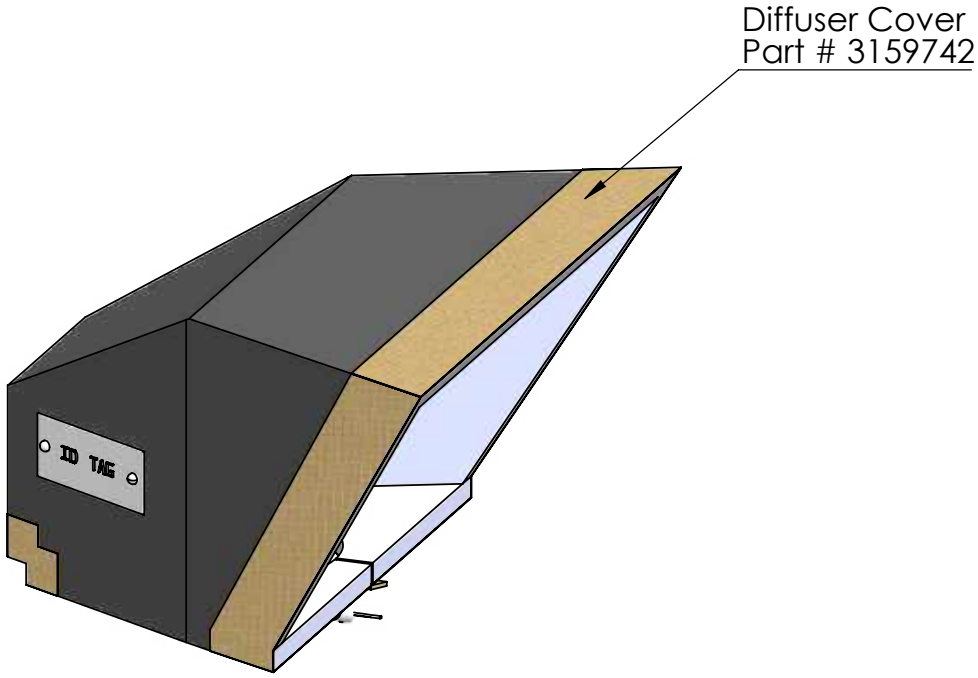

PROPRIETARY AND CONFIDENTIAL
THE INFORMATION HEREON IS THE PROPERTY OF KALB CORP. AND/OR ITS SUBSIDIARIES. WITHOUT WRITTEN PERMISSION, ANY COPYING, TRANSMITTAL TO OTHERS, AND ANY USE EXCEPT THAT FOR WHICH IT IS LOANED, IS PROHIBITED

NEXTRAN TRUCK CENTERS

Autocar
2011 ISL 9L
Kit # K568

PROPRIETARY AND CONFIDENTIAL
THE INFORMATION HEREON IS THE PROPERTY OF KALB CORP. AND/OR ITS SUBSIDIARIES. WITHOUT WRITTEN PERMISSION, ANY COPYING, TRANSMITTAL TO OTHERS, AND ANY USE EXCEPT THAT FOR WHICH IT IS LOANED, IS PROHIBITED

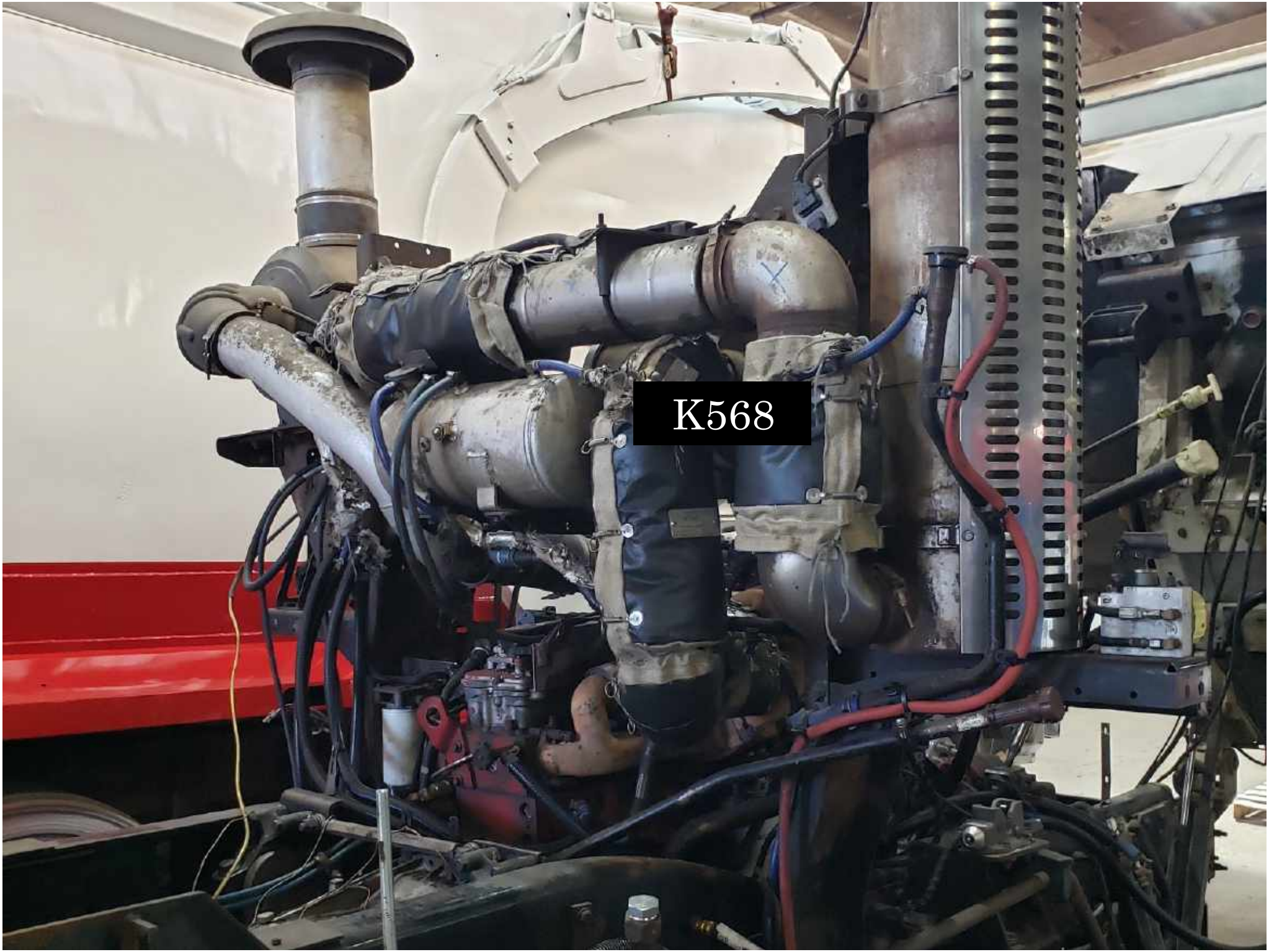
K568

NEXTRAN TRUCK CENTERS

Autocar
ACX64 9L CNG 2019
Patch Kit K800

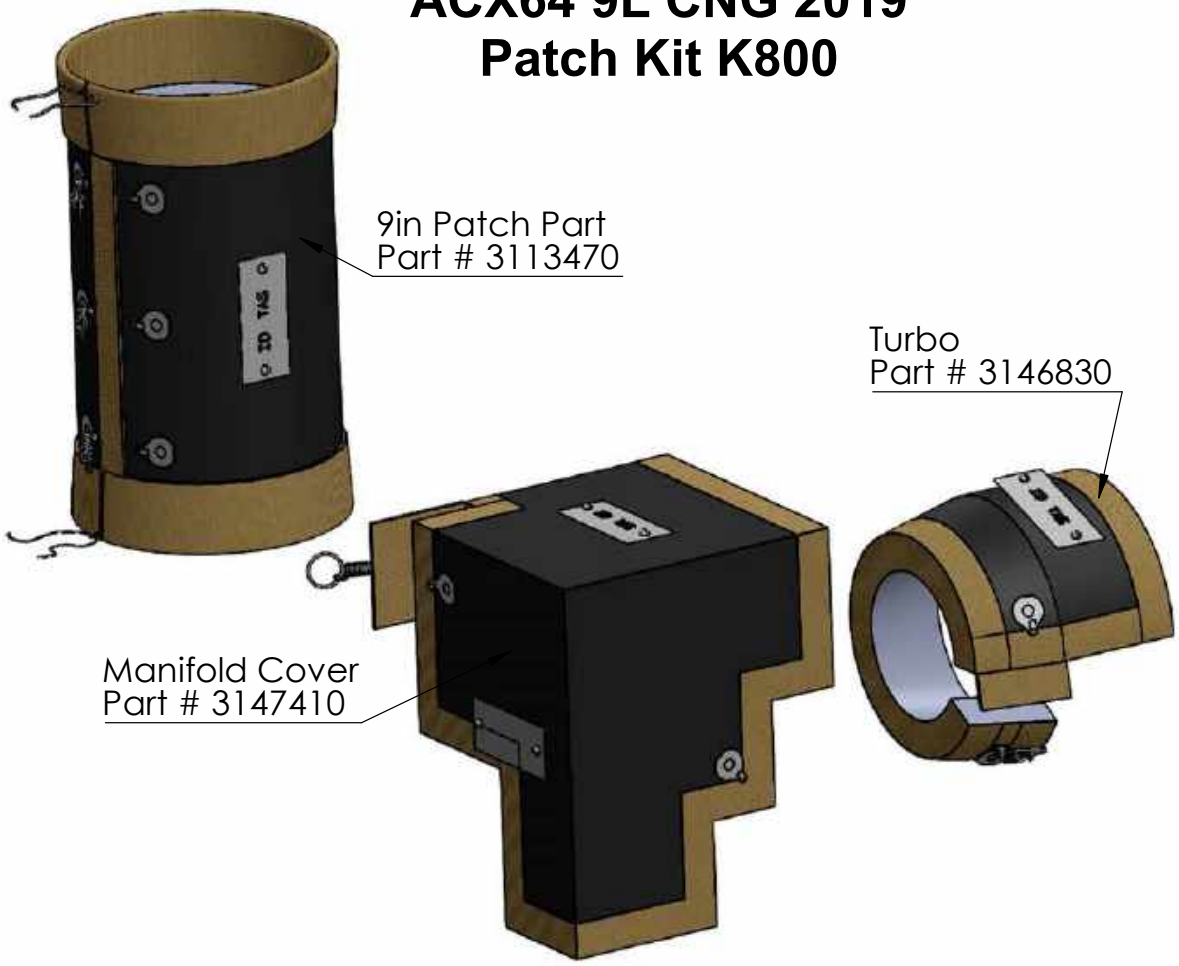

PROPRIETARY AND CONFIDENTIAL
THE INFORMATION HEREON IS THE PROPERTY OF KALB CORP. AND/OR ITS SUBSIDIARIES.
WITHOUT WRITTEN PERMISSION, ANY COPYING, TRANSMITTAL TO OTHERS, AND ANY
USE EXCEPT THAT FOR WHICH IT IS LOANED, IS PROHIBITED

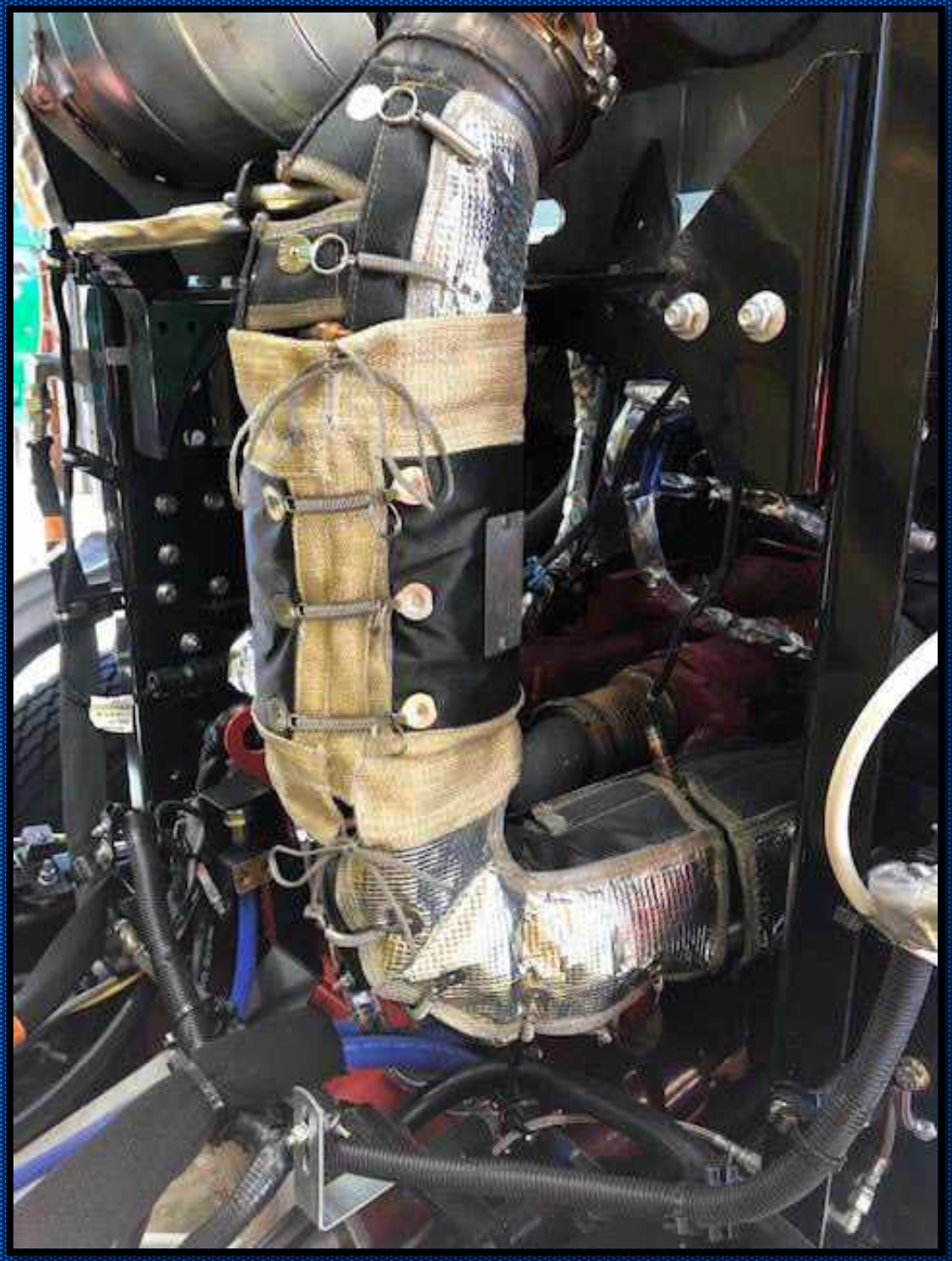

Distributed by:

NEXTRAN® TRUCK CENTERS

Autocar
2018-2020 9L
Diesel
Kit K571

PROPRIETARY AND CONFIDENTIAL
THE INFORMATION HEREON IS THE PROPERTY OF KALB CORP. AND/OR ITS SUBSIDIARIES.
WITHOUT WRITTEN PERMISSION, ANY COPYING, TRANSMITTAL TO OTHERS, AND ANY USE
EXCEPT THAT FOR WHICH IT IS LOANED, IS PROHIBITED

Kit K571

Distributed by:

www.nextranusa.com

Autocar
2017 Diesel
Kit # K574

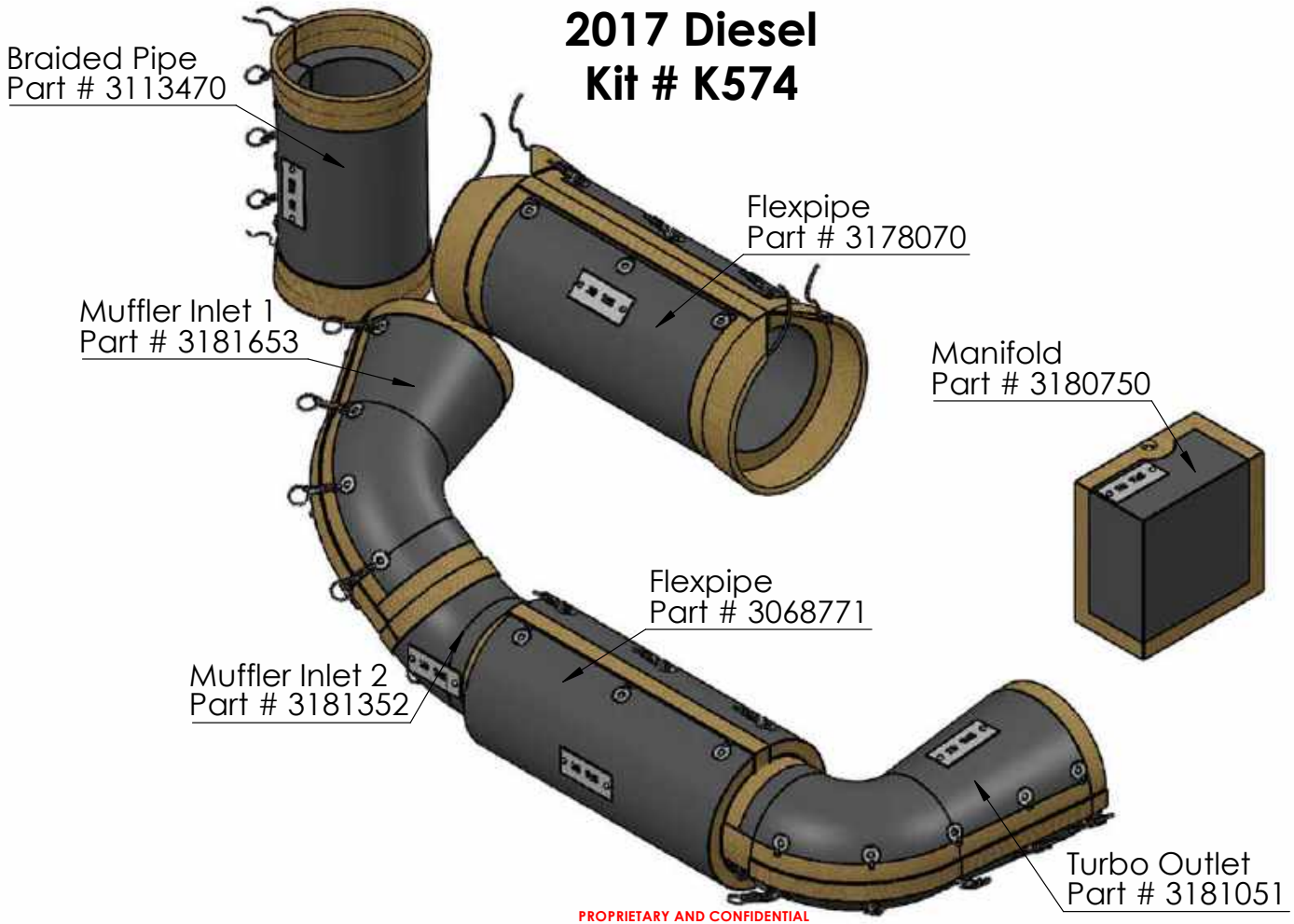

PROPRIETARY AND CONFIDENTIAL
THE INFORMATION HEREON IS THE PROPERTY OF KALB CORP. AND/OR ITS SUBSIDIARIES.
WITHOUT WRITTEN PERMISSION, ANY COPYING, TRANSMITTAL TO OTHERS, AND ANY USE
EXCEPT THAT FOR WHICH IT IS LOANED, IS PROHIBITED

NEXTRAN® TRUCK CENTERS

Autocar
2017 ACX 9L CNG
Catalyst
K589

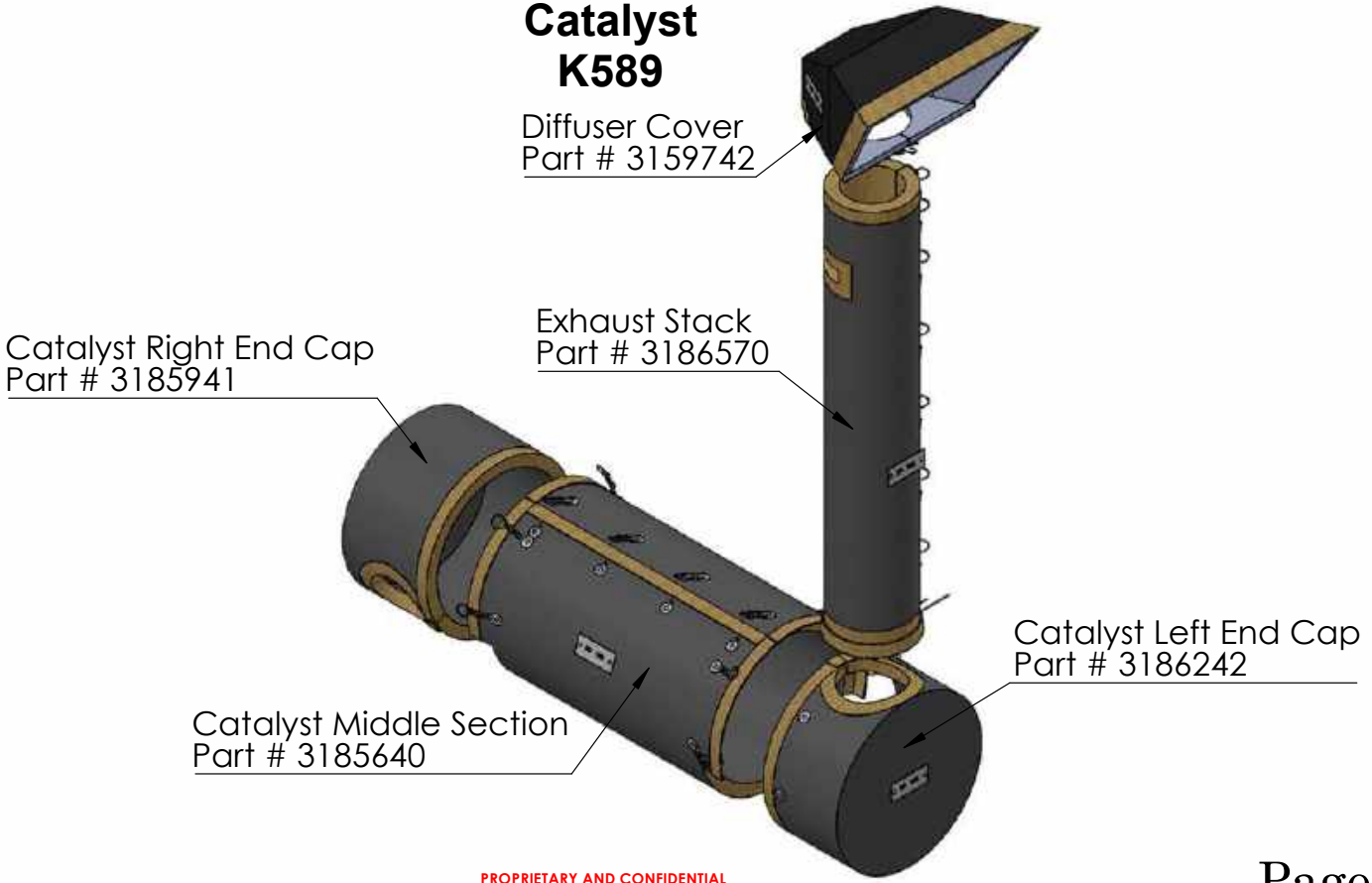

PROPRIETARY AND CONFIDENTIAL
THE INFORMATION HEREON IS THE PROPERTY OF KALB CORP. AND/OR ITS SUBSIDIARIES.
WITHOUT WRITTEN PERMISSION, ANY COPYING, TRANSMITTAL TO OTHERS, AND ANY USE
EXCEPT THAT FOR WHICH IT IS LOANED, IS PROHIBITED

K589

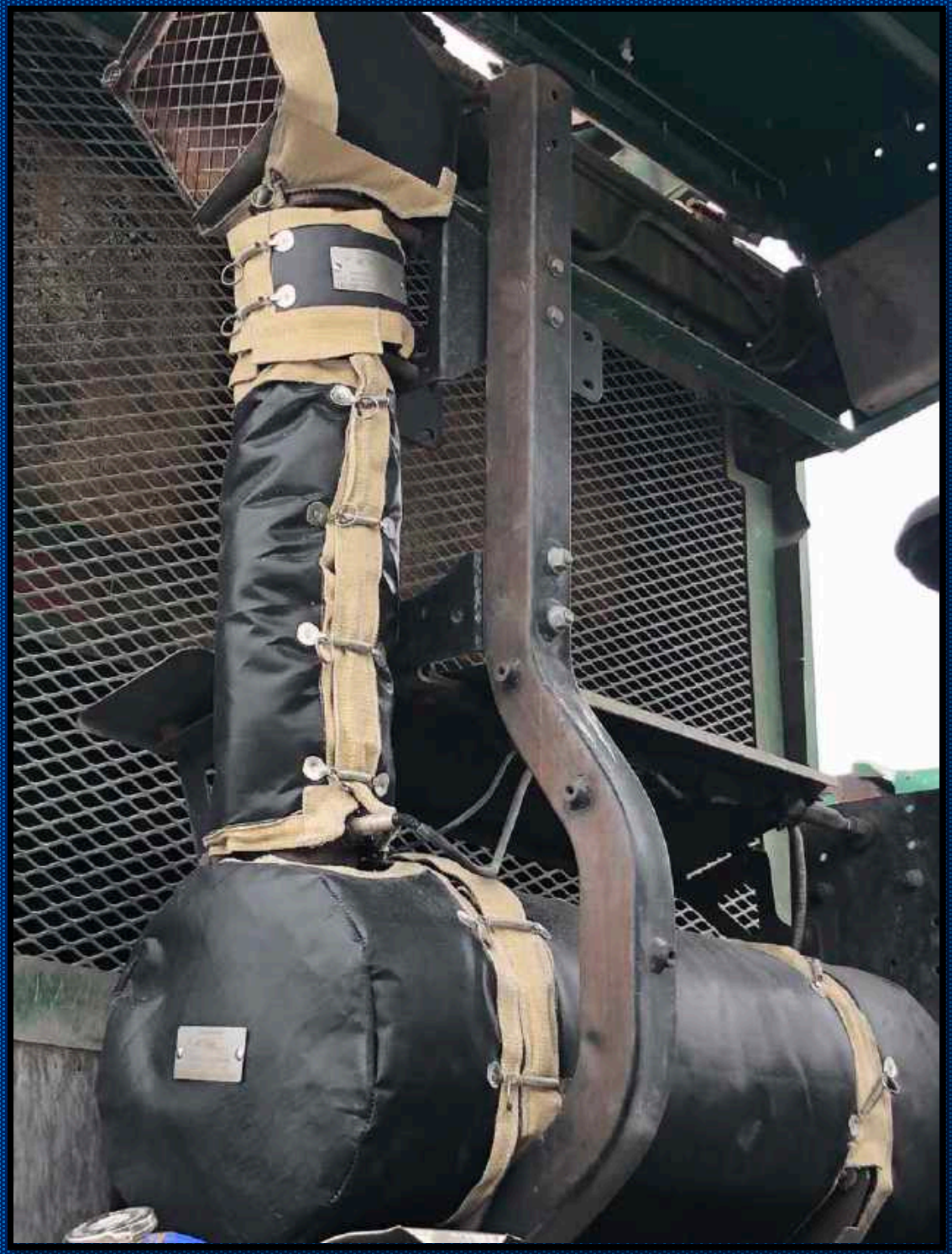

Freightliner Truck Insulation Kits

Freightliner
Diesel FL112
Kit # K358

PROPRIETARY AND CONFIDENTIAL
THE INFORMATION HEREON IS THE PROPERTY OF KALB CORP. AND/OR ITS SUBSIDIARIES. WITHOUT WRITTEN PERMISSION, ANY COPYING, TRANSMITTAL TO OTHERS, AND ANY USE EXCEPT THAT FOR WHICH IT IS LOANED, IS PROHIBITED

Freightliner
Diesel FL112 Rear Loader
Kit # K361

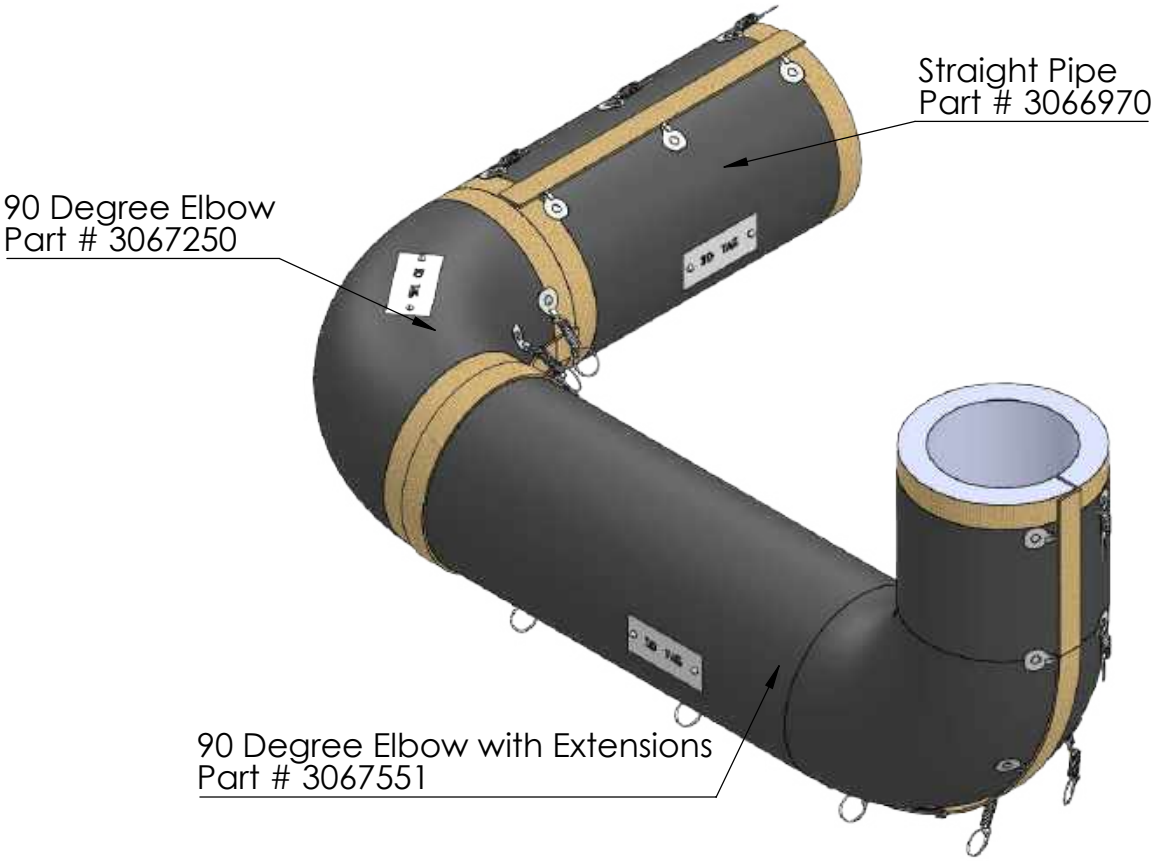

PROPRIETARY AND CONFIDENTIAL
THE INFORMATION HEREON IS THE PROPERTY OF KALB CORP. AND/OR ITS SUBSIDIARIES. WITHOUT WRITTEN PERMISSION, ANY COPYING, TRANSMITTAL TO OTHERS, AND ANY USE EXCEPT THAT FOR WHICH IT IS LOANED, IS PROHIBITED

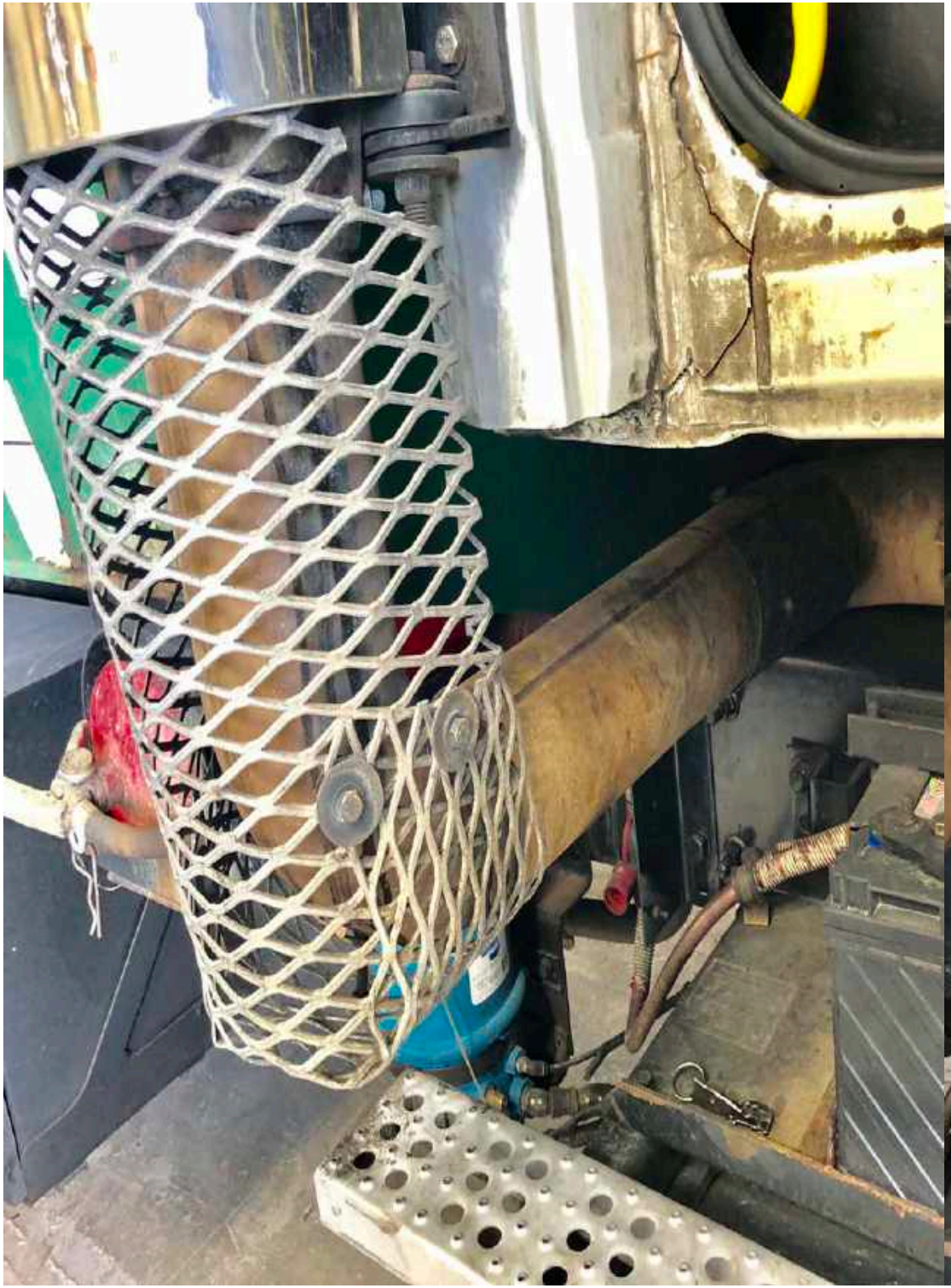

Freightliner
Diesel FL114
Kit # K379

PROPRIETARY AND CONFIDENTIAL
THE INFORMATION HEREON IS THE PROPERTY OF KALB CORP. AND/OR ITS SUBSIDIARIES. WITHOUT WRITTEN PERMISSION, ANY COPYING, TRANSMITTAL TO OTHERS, AND ANY USE EXCEPT THAT FOR WHICH IT IS LOANED, IS PROHIBITED

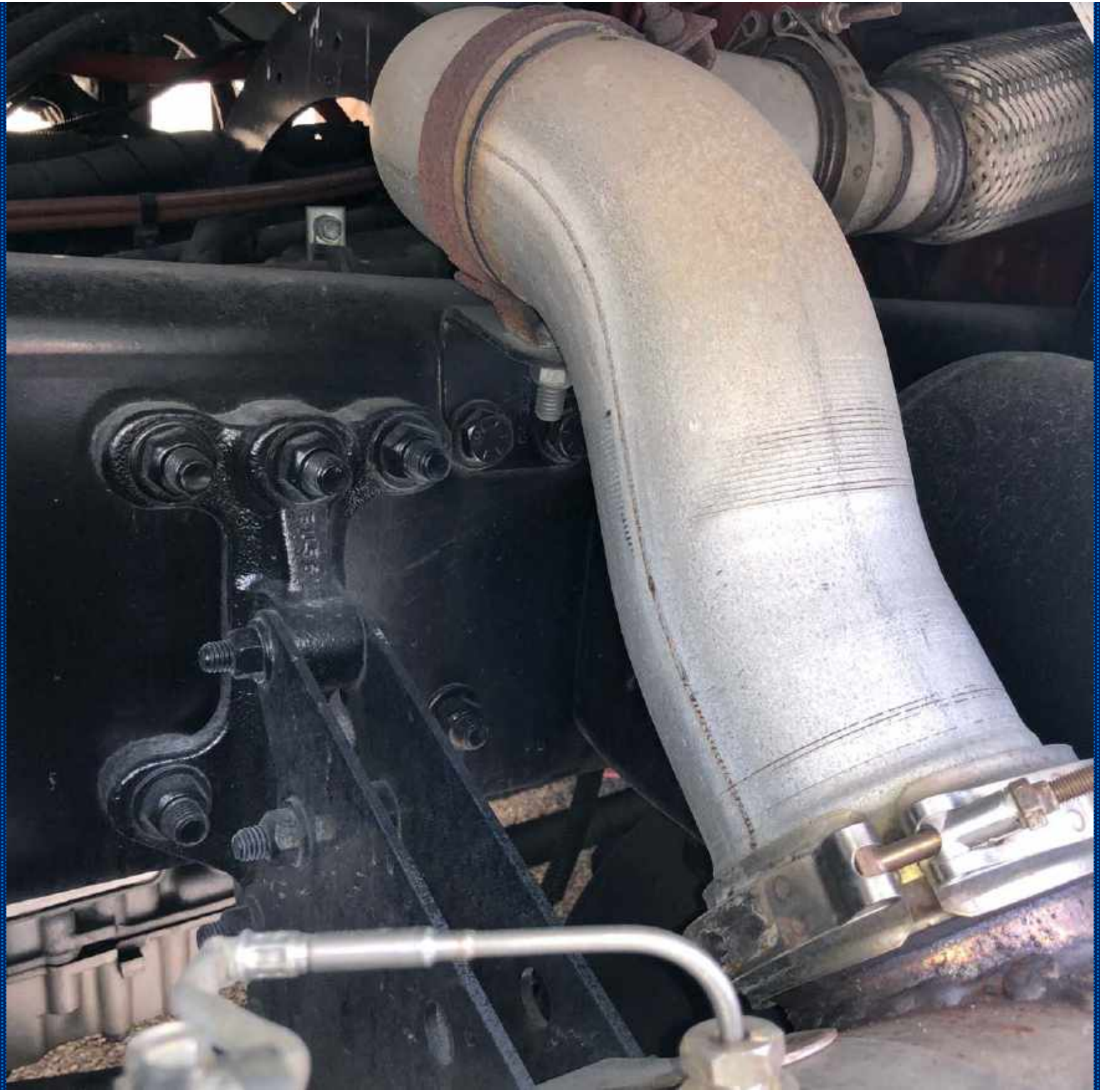

Freightliner
Diesel Condor
Kit # K384

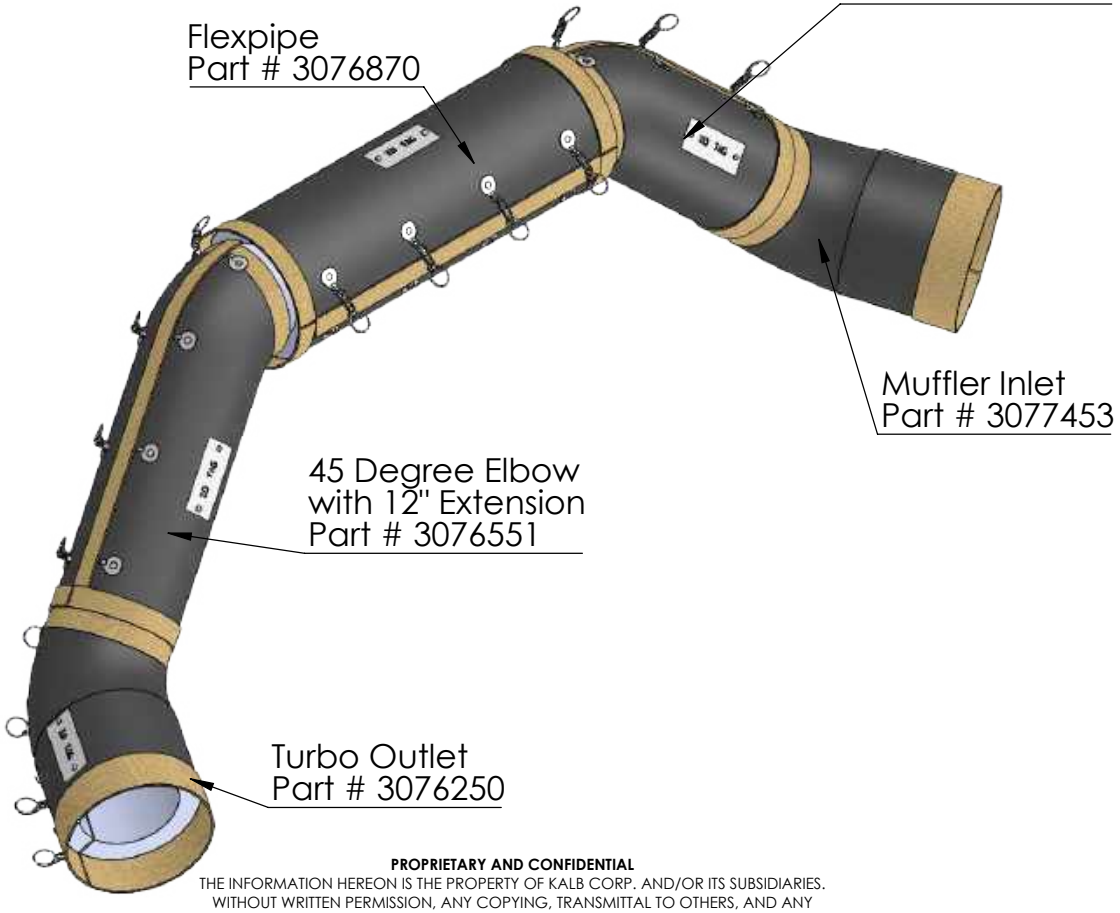

PROPRIETARY AND CONFIDENTIAL
THE INFORMATION HEREON IS THE PROPERTY OF KALB CORP. AND/OR ITS SUBSIDIARIES. WITHOUT WRITTEN PERMISSION, ANY COPYING, TRANSMITTAL TO OTHERS, AND ANY USE EXCEPT THAT FOR WHICH IT IS LOANED, IS PROHIBITED

Freightliner
Diesel M2112
Kit # K399

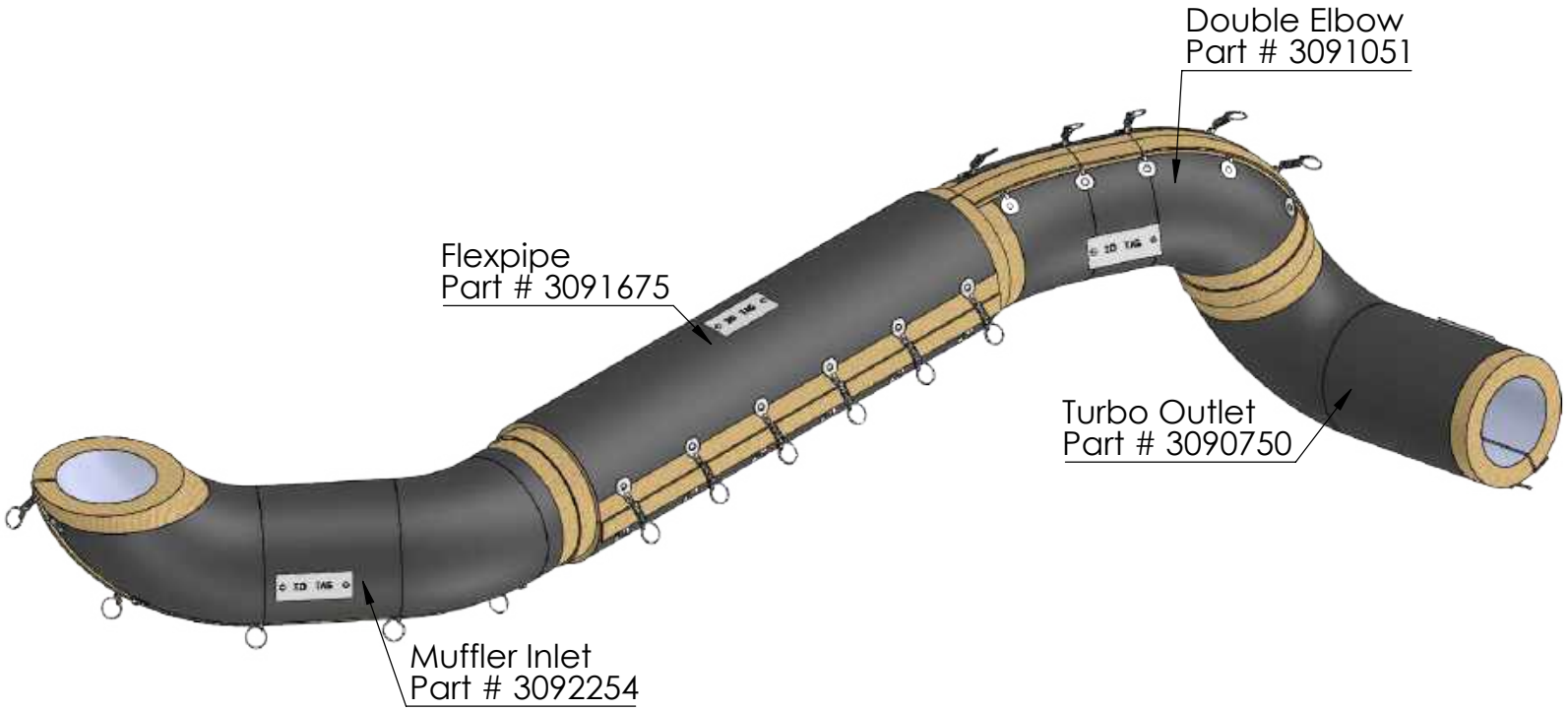

PROPRIETARY AND CONFIDENTIAL
THE INFORMATION HEREON IS THE PROPERTY OF KALB CORP. AND/OR ITS SUBSIDIARIES. WITHOUT WRITTEN PERMISSION, ANY COPYING, TRANSMITTAL TO OTHERS, AND ANY USE EXCEPT THAT FOR WHICH IT IS LOANED, IS PROHIBITED

Kit K399

Peterbilt Truck Insulation Kits

Peterbilt
320 9L CNG
Kit # K297

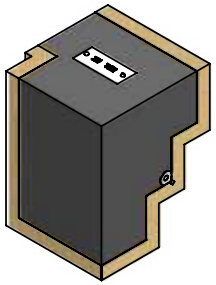

Manifold Transition Cover
Part # 3147711

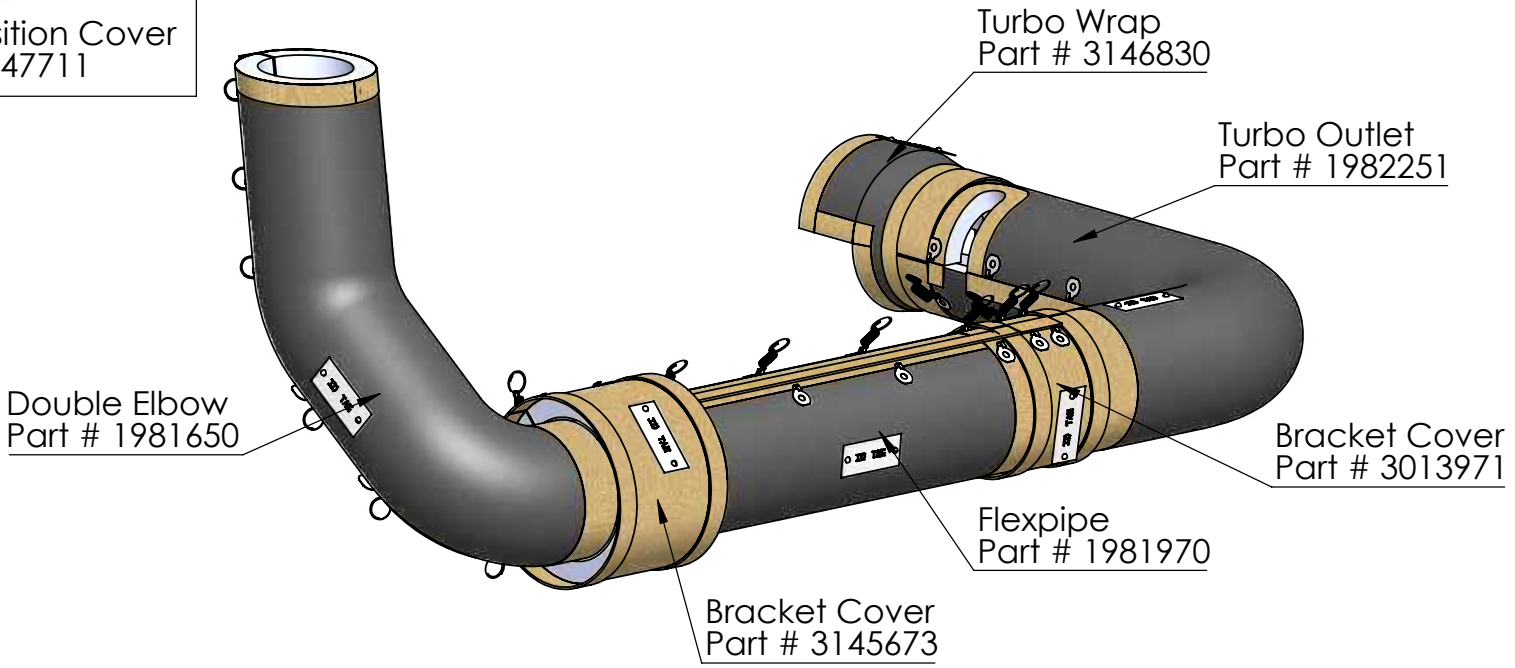

PROPRIETARY AND CONFIDENTIAL
THE INFORMATION HEREON IS THE PROPERTY OF KALB CORP. AND/OR ITS SUBSIDIARIES. WITHOUT WRITTEN PERMISSION, ANY COPYING, TRANSMITTAL TO OTHERS, AND ANY USE EXCEPT THAT FOR WHICH IT IS LOANED, IS PROHIBITED

Peterbilt
320 12L
Kit # K298

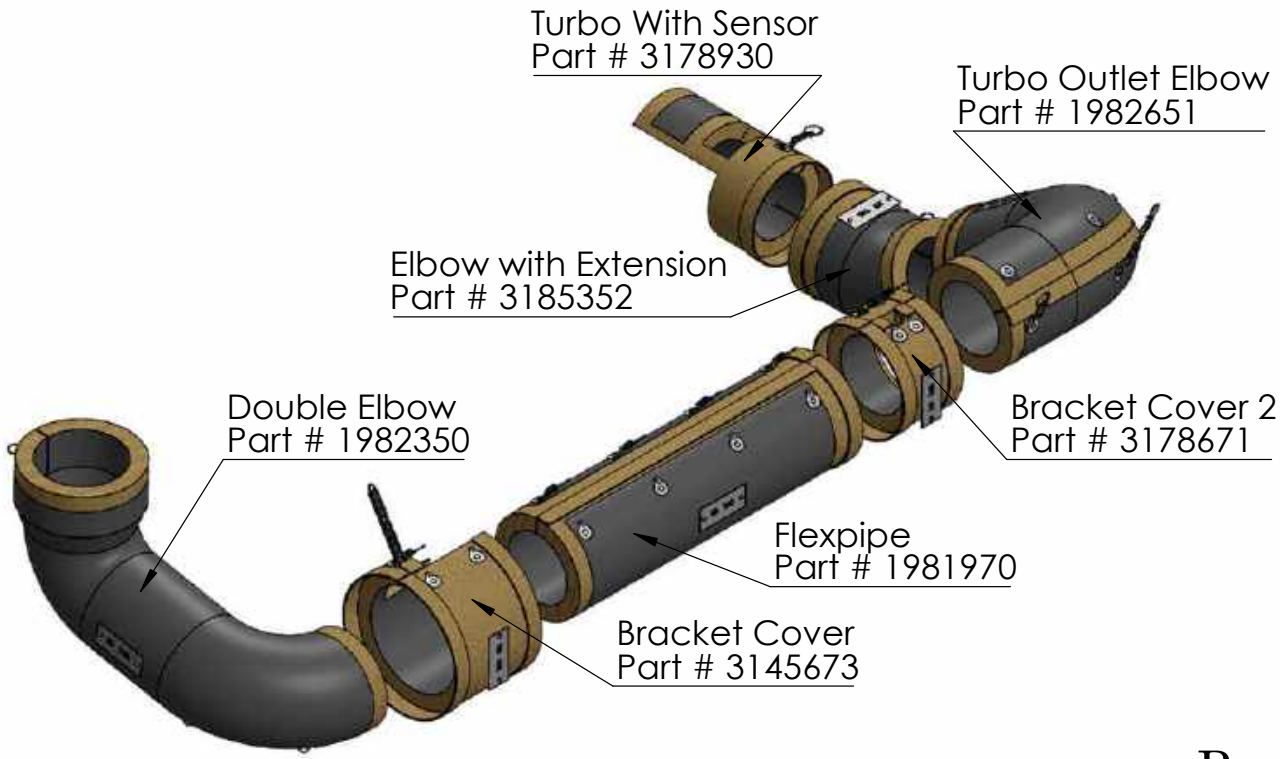

PROPRIETARY AND CONFIDENTIAL
THE INFORMATION HEREON IS THE PROPERTY OF KALB CORP. AND/OR ITS SUBSIDIARIES.
WITHOUT WRITTEN PERMISSION, ANY COPYING, TRANSMITTAL TO OTHERS, AND ANY USE
EXCEPT THAT FOR WHICH IT IS LOANED, IS PROHIBITED

K298

Peterbilt
320 9 & 12L Diesel
Kit # K326

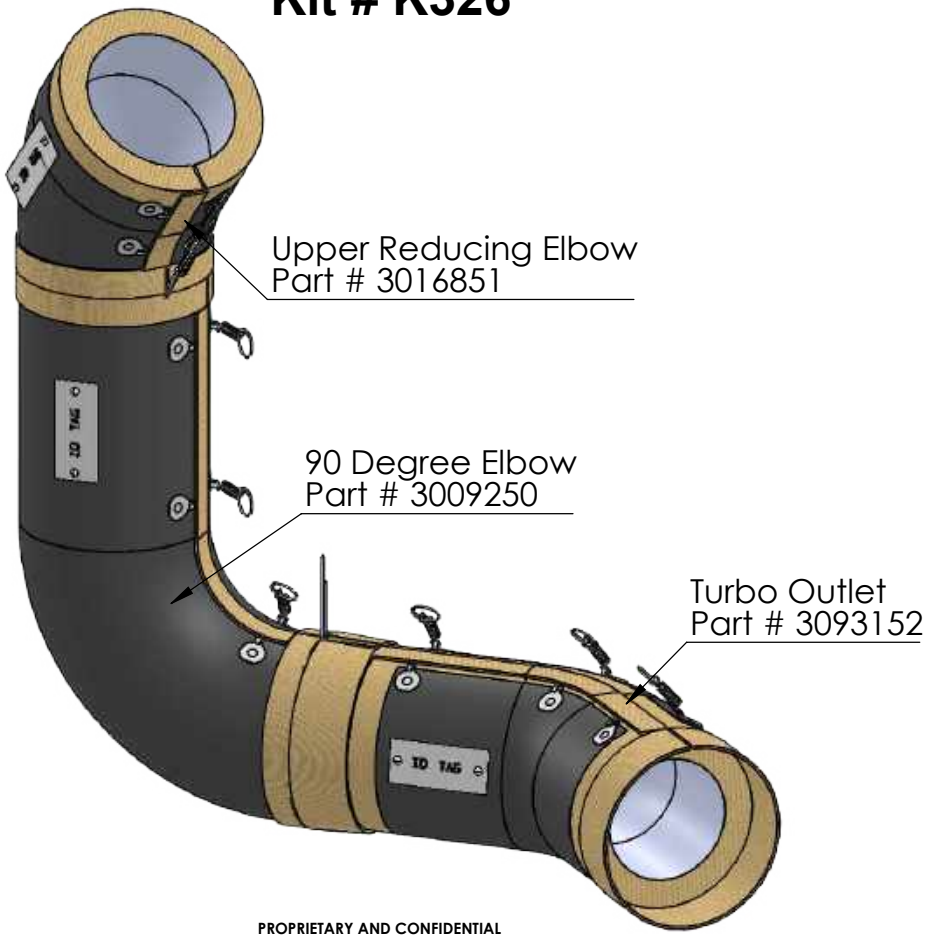

PROPRIETARY AND CONFIDENTIAL
THE INFORMATION HEREON IS THE PROPERTY OF KALB CORP. AND/OR ITS SUBSIDIARIES. WITHOUT WRITTEN PERMISSION, ANY COPYING, TRANSMITTAL TO OTHERS, AND ANY USE EXCEPT THAT FOR WHICH IT IS LOANED, IS PROHIBITED

Kit K326

NEXTRAN TRUCK CENTERS

Peterbilt
320 9L Diesel (2008)
Kit # K339

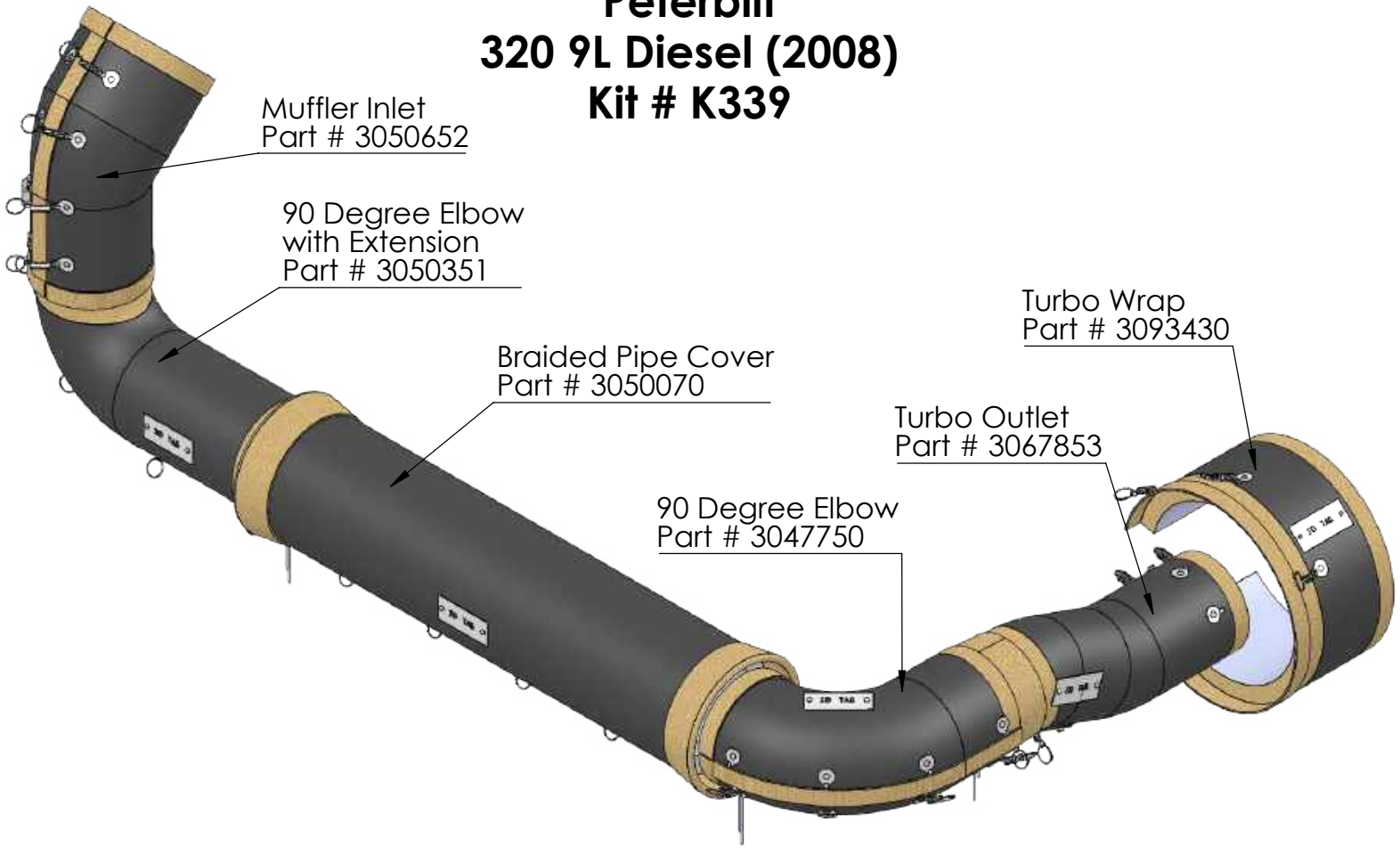

PROPRIETARY AND CONFIDENTIAL
THE INFORMATION HEREON IS THE PROPERTY OF KALB CORP. AND/OR ITS SUBSIDIARIES. WITHOUT WRITTEN PERMISSION, ANY COPYING, TRANSMITTAL TO OTHERS, AND ANY USE EXCEPT THAT FOR WHICH IT IS LOANED, IS PROHIBITED

Kit K339

Peterbilt
320 Diesel 5" Exhaust
Kit # K373

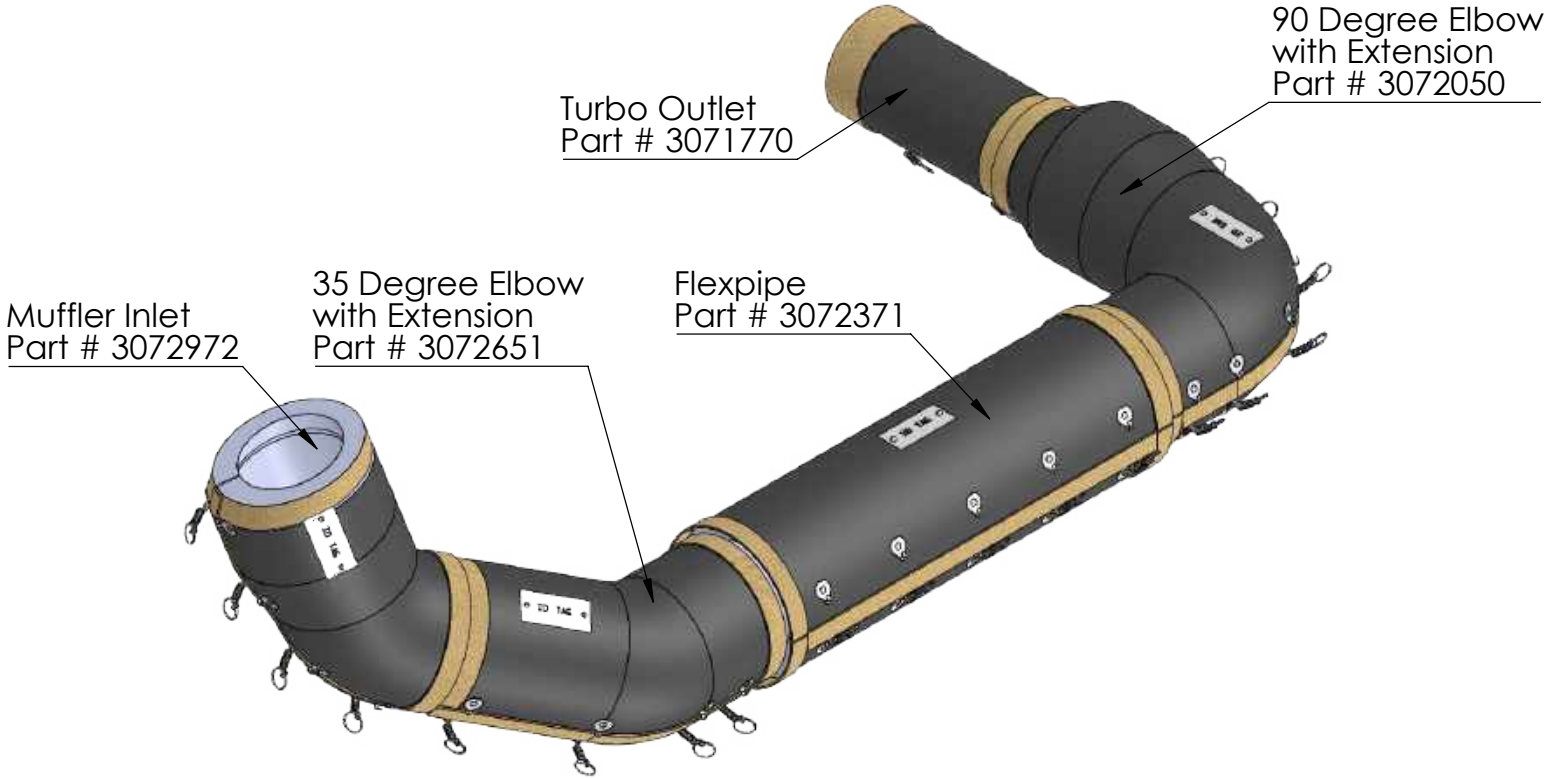

PROPRIETARY AND CONFIDENTIAL
THE INFORMATION HEREON IS THE PROPERTY OF KALB CORP. AND/OR ITS SUBSIDIARIES. WITHOUT WRITTEN PERMISSION, ANY COPYING, TRANSMITTAL TO OTHERS, AND ANY USE EXCEPT THAT FOR WHICH IT IS LOANED, IS PROHIBITED

Peterbilt
320 Diesel (2006)
Kit # K381

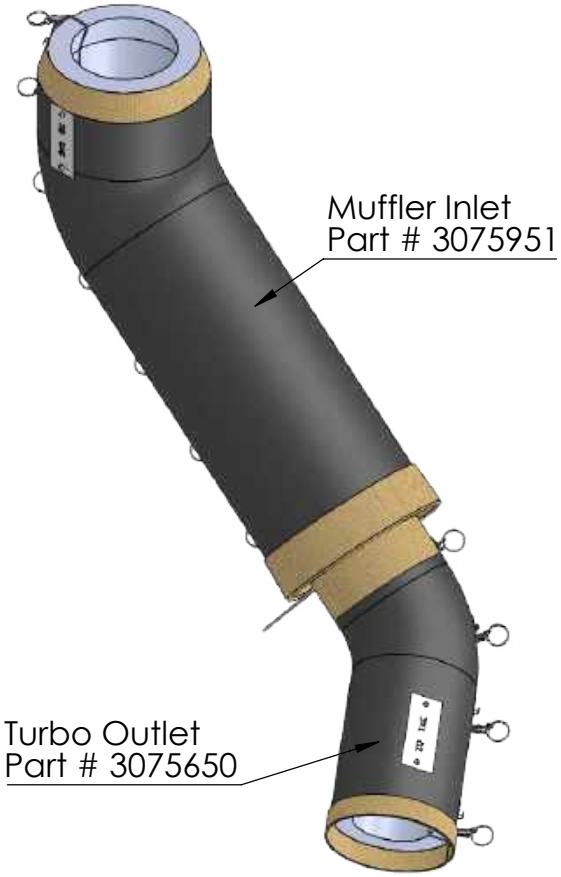

PROPRIETARY AND CONFIDENTIAL
THE INFORMATION HEREON IS THE PROPERTY OF KALB CORP. AND/OR ITS SUBSIDIARIES. WITHOUT WRITTEN PERMISSION, ANY COPYING, TRANSMITTAL TO OTHERS, AND ANY USE EXCEPT THAT FOR WHICH IT IS LOANED, IS PROHIBITED

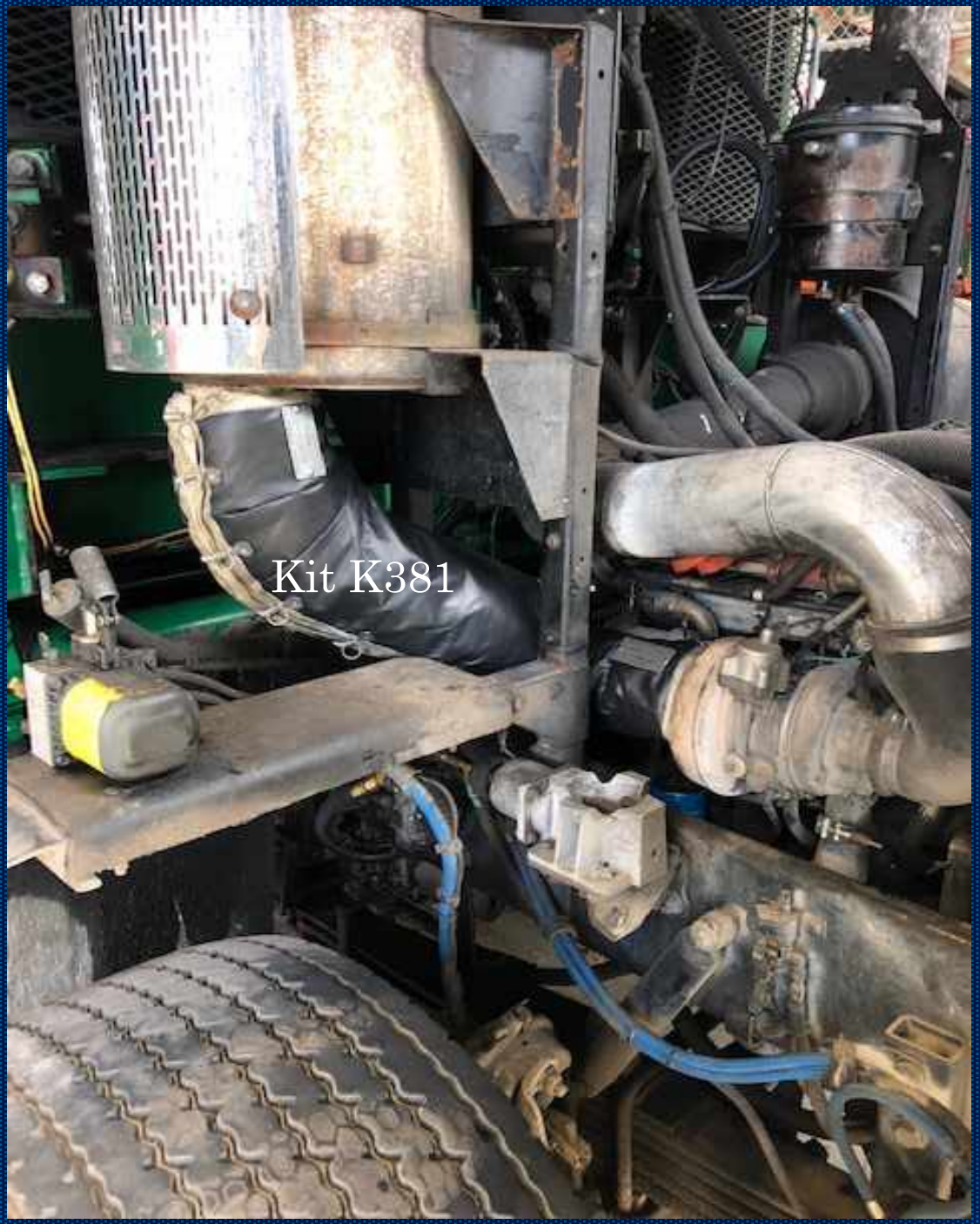
Kit K381

Peterbilt
567 CNG
Kit # K520

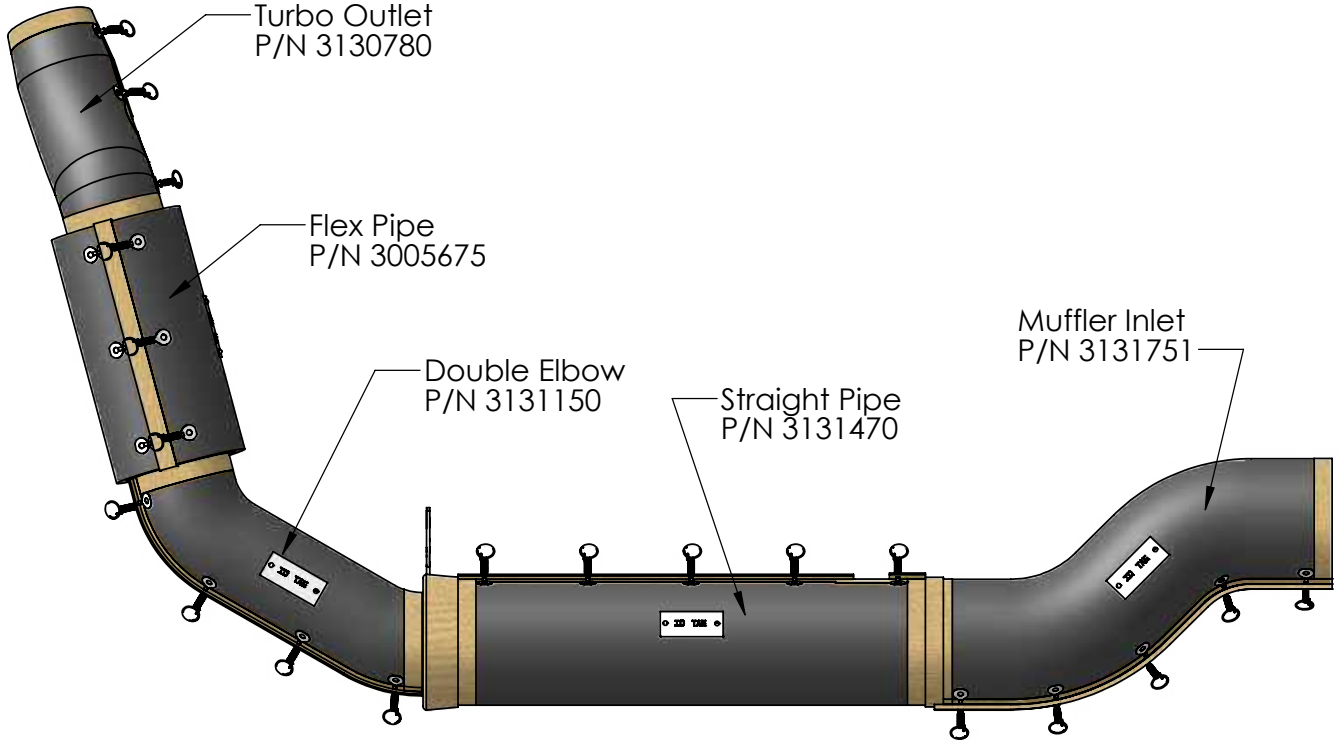

PROPRIETARY AND CONFIDENTIAL
THE INFORMATION HEREON IS THE PROPERTY OF KALB CORP. AND/OR ITS SUBSIDIARIES.
WITHOUT WRITTEN PERMISSION, ANY COPYING, TRANSMITTAL TO OTHERS, AND ANY
USE EXCEPT THAT FOR WHICH IT IS LOANED, IS PROHIBITED

Kit K520

Peterbilt
365 CNG
Kit # K529

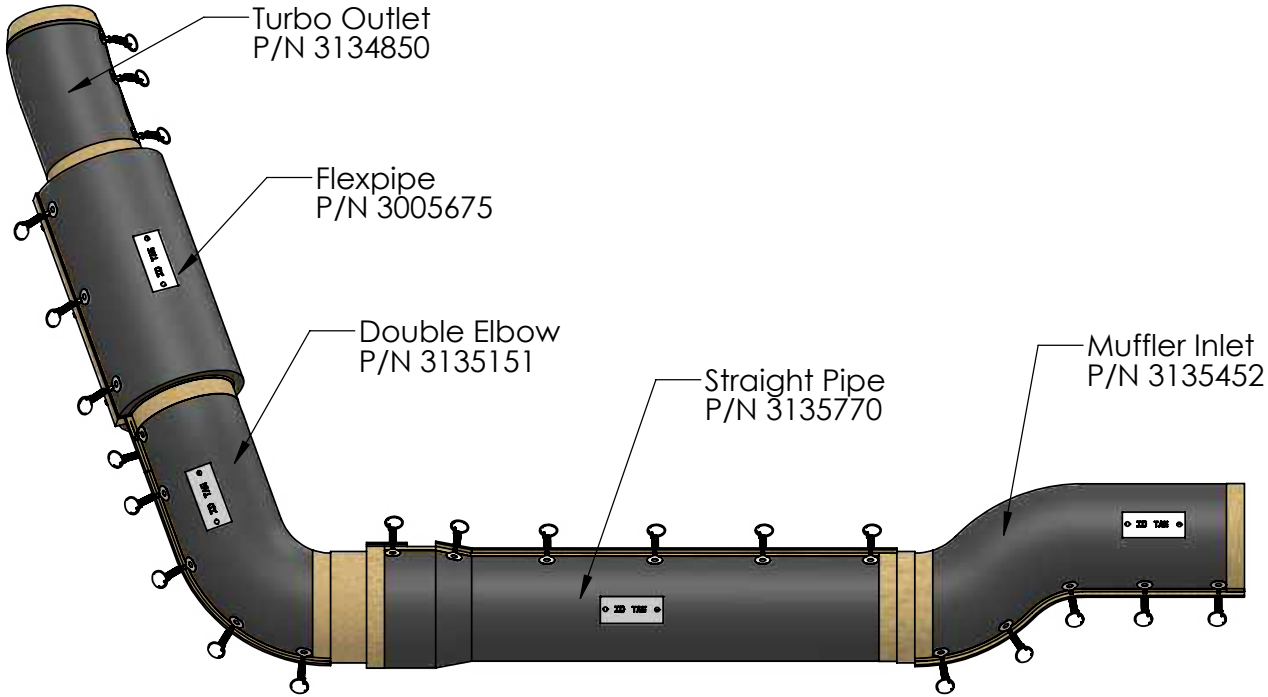

PROPRIETARY AND CONFIDENTIAL
THE INFORMATION HEREON IS THE PROPERTY OF KALB CORP. AND/OR ITS SUBSIDIARIES.
WITHOUT WRITTEN PERMISSION, ANY COPYING, TRANSMITTAL TO OTHERS, AND ANY
USE EXCEPT THAT FOR WHICH IT IS LOANED, IS PROHIBITED

Peterbilt
320 9L Diesel (2015) Aftertreatment Cans
Kit # K538

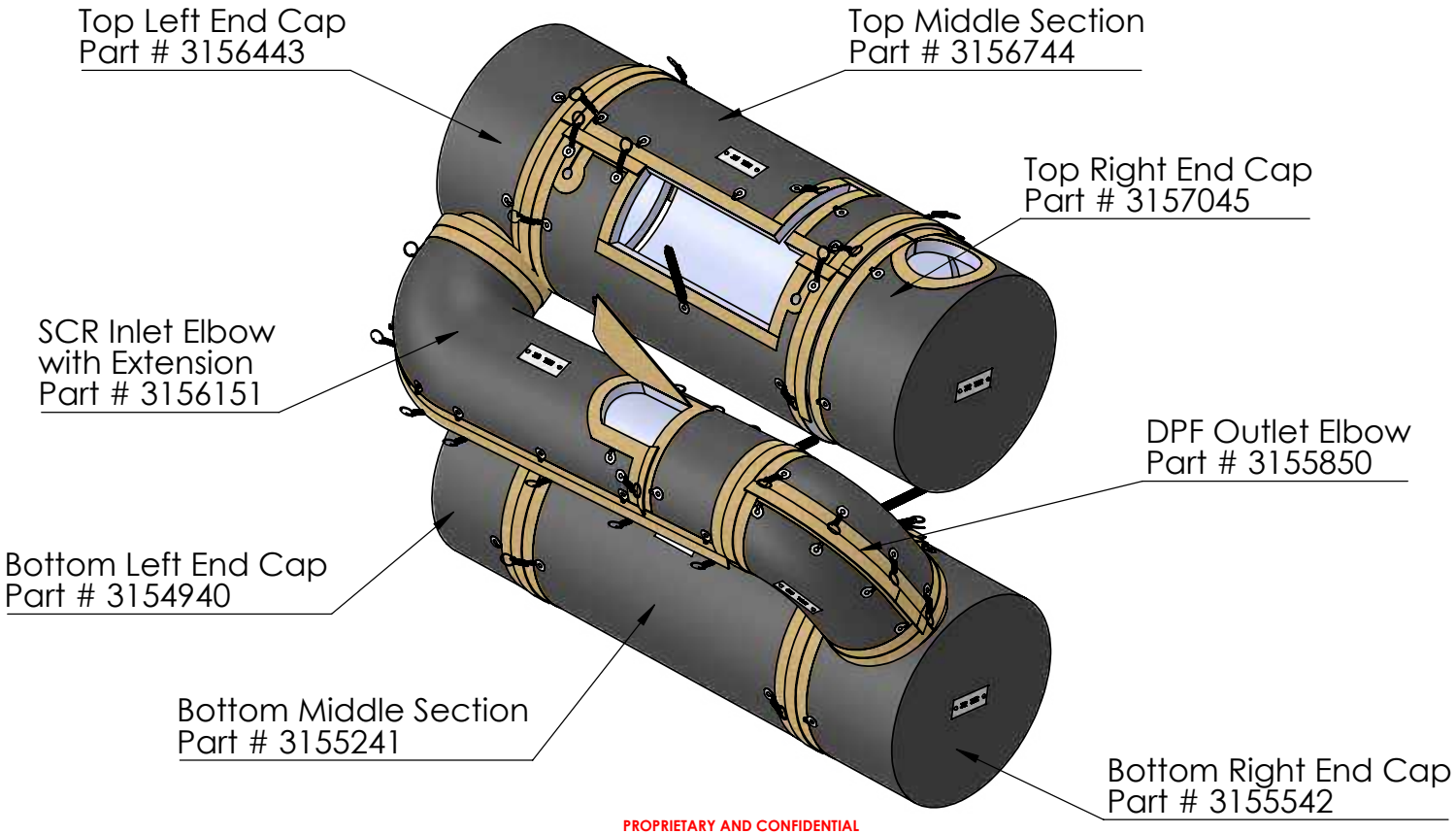

PROPRIETARY AND CONFIDENTIAL
THE INFORMATION HEREON IS THE PROPERTY OF KALB CORP. AND/OR ITS SUBSIDIARIES. WITHOUT WRITTEN PERMISSION, ANY COPYING, TRANSMITTAL TO OTHERS, AND ANY USE EXCEPT THAT FOR WHICH IT IS LOANED, IS PROHIBITED

K538

Peterbilt
520 9L CNG (2019)
Kit # K541

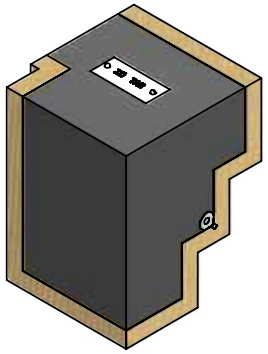

Manifold Transition Cover
Part # 3147711

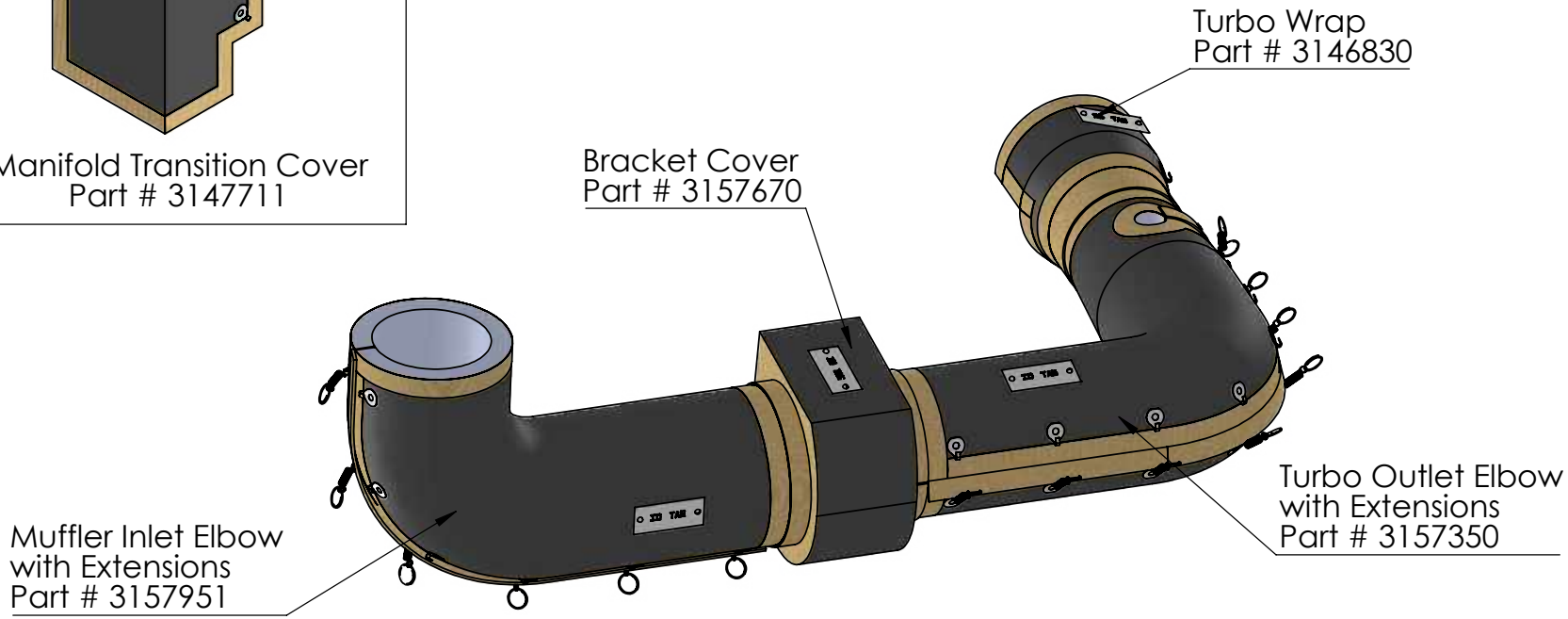

PROPRIETARY AND CONFIDENTIAL
THE INFORMATION HEREON IS THE PROPERTY OF KALB CORP. AND/OR ITS SUBSIDIARIES.
WITHOUT WRITTEN PERMISSION, ANY COPYING, TRANSMITTAL TO OTHERS, AND ANY
USE EXCEPT THAT FOR WHICH IT IS LOANED, IS PROHIBITED

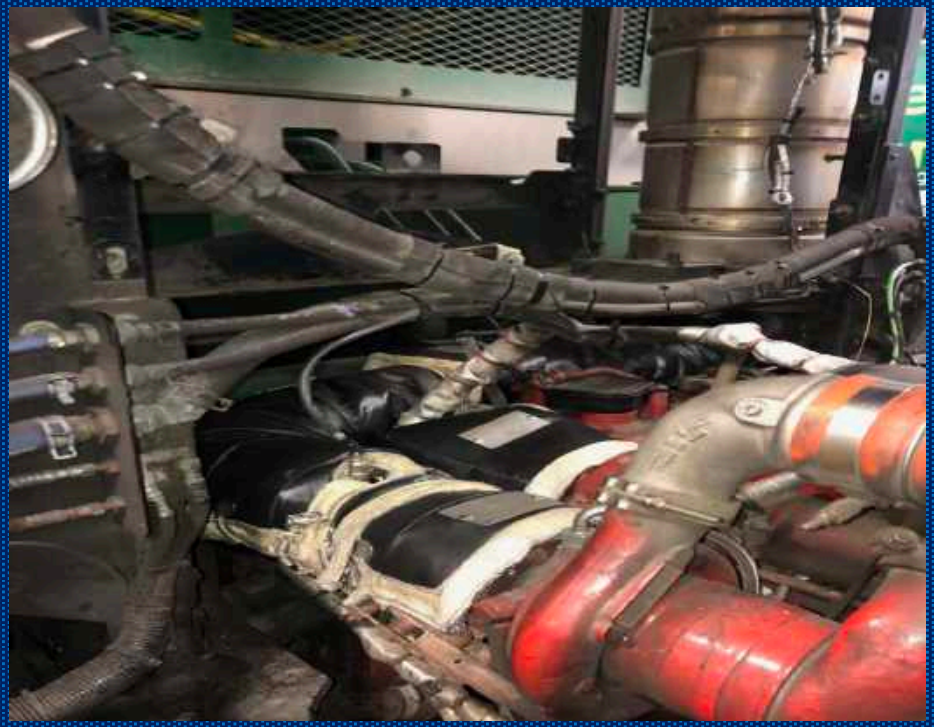

Peterbilt
520 9L CNG (2019)
Can Cover Half Shell

PROPRIETARY AND CONFIDENTIAL
THE INFORMATION HEREON IS THE PROPERTY OF KALB CORP. AND/OR ITS SUBSIDIARIES. WITHOUT WRITTEN PERMISSION, ANY COPYING, TRANSMITTAL TO OTHERS, AND ANY USE EXCEPT THAT FOR WHICH IT IS LOANED, IS PROHIBITED

NOTICE

Peterbilt
320 Diesel (2000)
Kit # K547

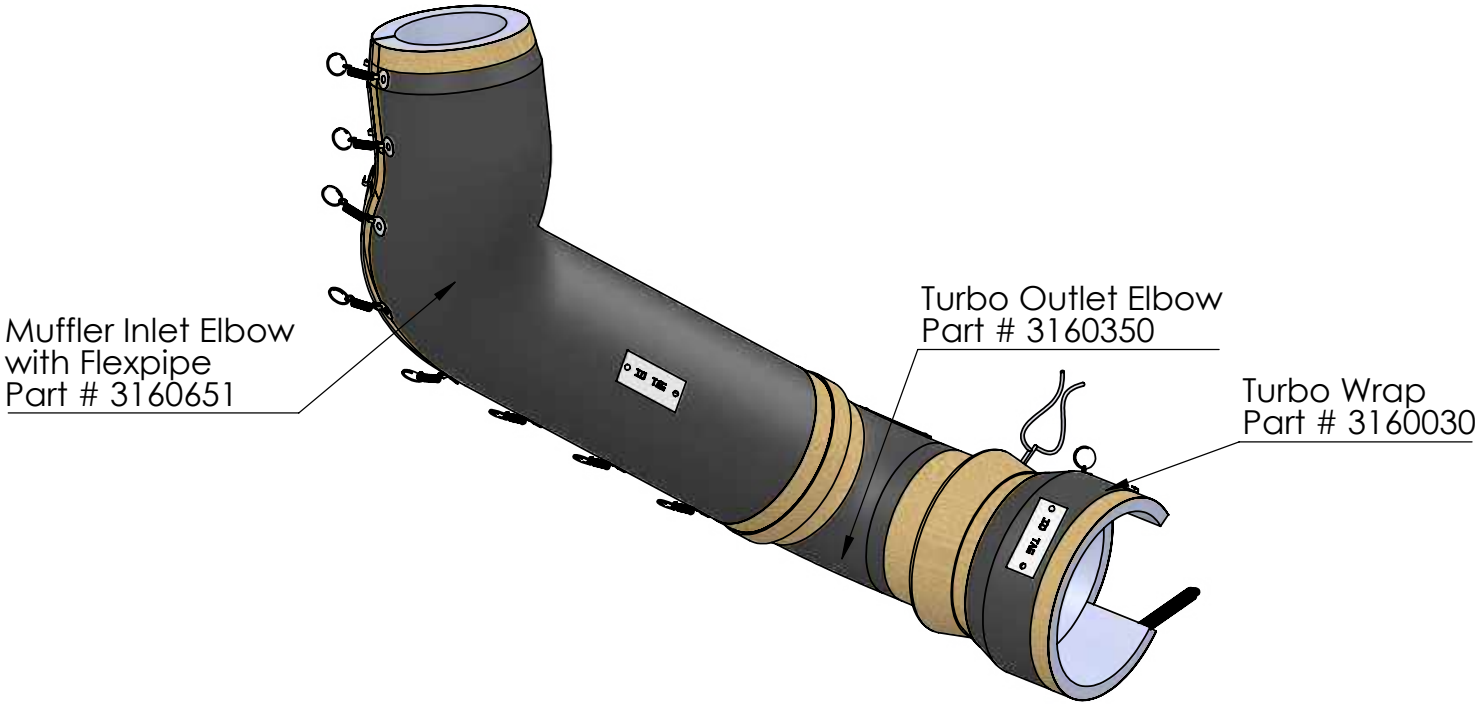

PROPRIETARY AND CONFIDENTIAL
THE INFORMATION HEREON IS THE PROPERTY OF KALB CORP. AND/OR ITS SUBSIDIARIES. WITHOUT WRITTEN PERMISSION, ANY COPYING, TRANSMITTAL TO OTHERS, AND ANY USE EXCEPT THAT FOR WHICH IT IS LOANED, IS PROHIBITED

K547

Peterbilt
520 9L CNG
Diffuser Cover

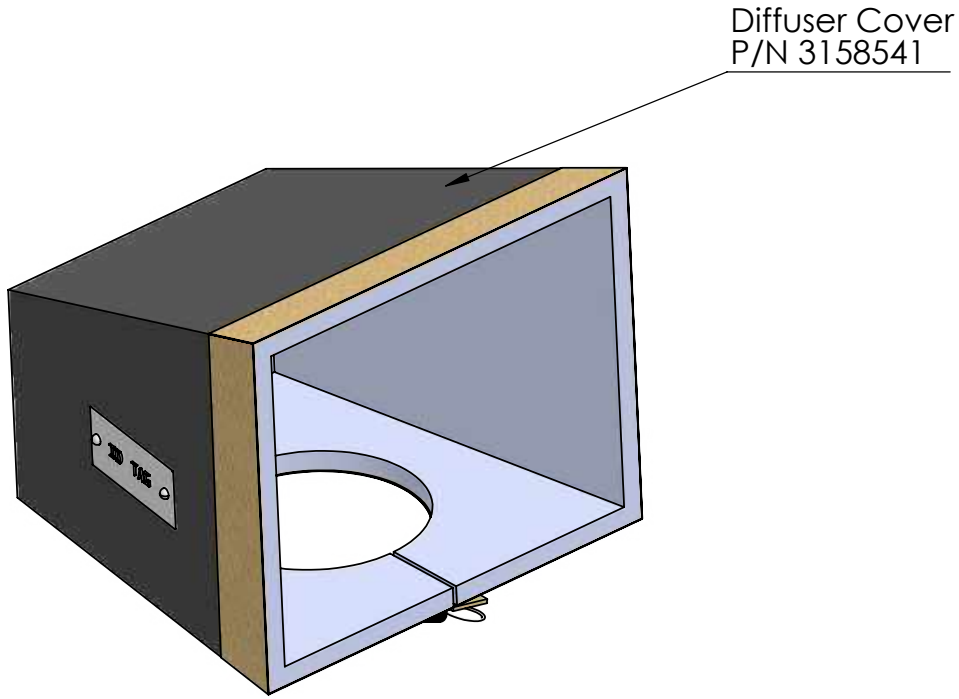

PROPRIETARY AND CONFIDENTIAL
THE INFORMATION HEREON IS THE PROPERTY OF KALB CORP. AND/OR ITS SUBSIDIARIES. WITHOUT WRITTEN PERMISSION, ANY COPYING, TRANSMITTAL TO OTHERS, AND ANY USE EXCEPT THAT FOR WHICH IT IS LOANED, IS PROHIBITED

Peterbilt
567 Mixer
K580

PROPRIETARY AND CONFIDENTIAL
THE INFORMATION HEREON IS THE PROPERTY OF KALB CORP. AND/OR ITS SUBSIDIARIES.
WITHOUT WRITTEN PERMISSION, ANY COPYING, TRANSMITTAL TO OTHERS, AND ANY USE
EXCEPT THAT FOR WHICH IT IS LOANED, IS PROHIBITED

K580

NEXTRAN® TRUCK CENTERS

Peterbilt
357 Mixer
K583

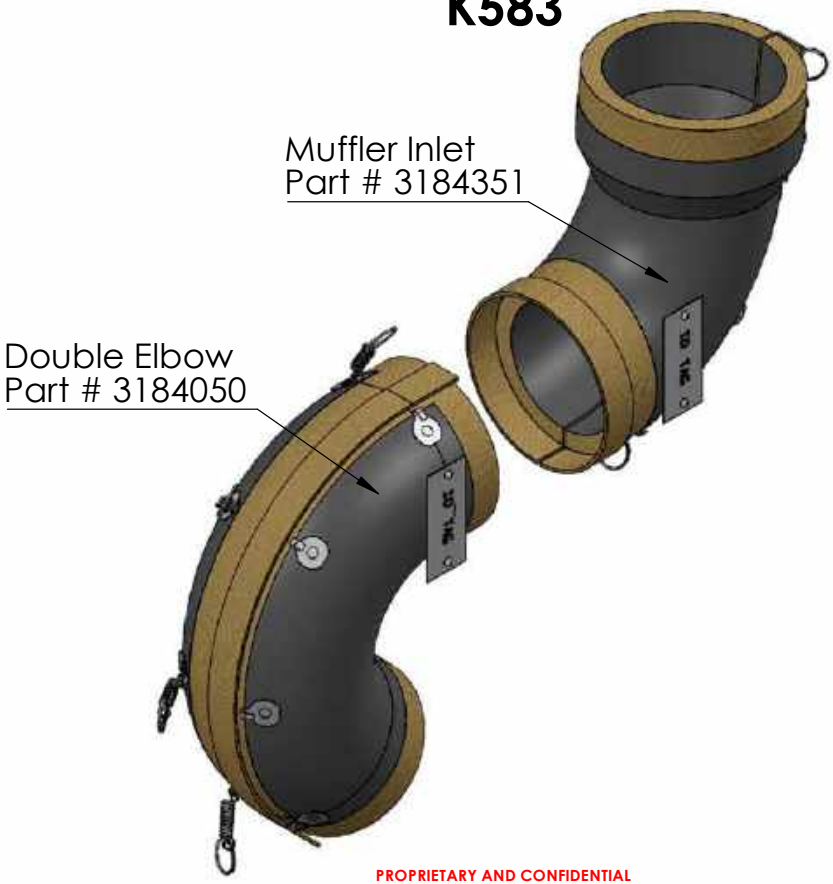

PROPRIETARY AND CONFIDENTIAL
THE INFORMATION HEREON IS THE PROPERTY OF KALB CORP. AND/OR ITS SUBSIDIARIES.
WITHOUT WRITTEN PERMISSION, ANY COPYING, TRANSMITTAL TO OTHERS, AND ANY USE
EXCEPT THAT FOR WHICH IT IS LOANED, IS PROHIBITED

K583

NEXTRAN® TRUCK CENTERS

Peterbilt
356 Mixer
K586

PROPRIETARY AND CONFIDENTIAL
THE INFORMATION HEREON IS THE PROPERTY OF KALB CORP. AND/OR ITS SUBSIDIARIES.
WITHOUT WRITTEN PERMISSION, ANY COPYING, TRANSMITTAL TO OTHERS, AND ANY USE
EXCEPT THAT FOR WHICH IT IS LOANED, IS PROHIBITED

K586

Peterbilt
520 12L Diesel
K601

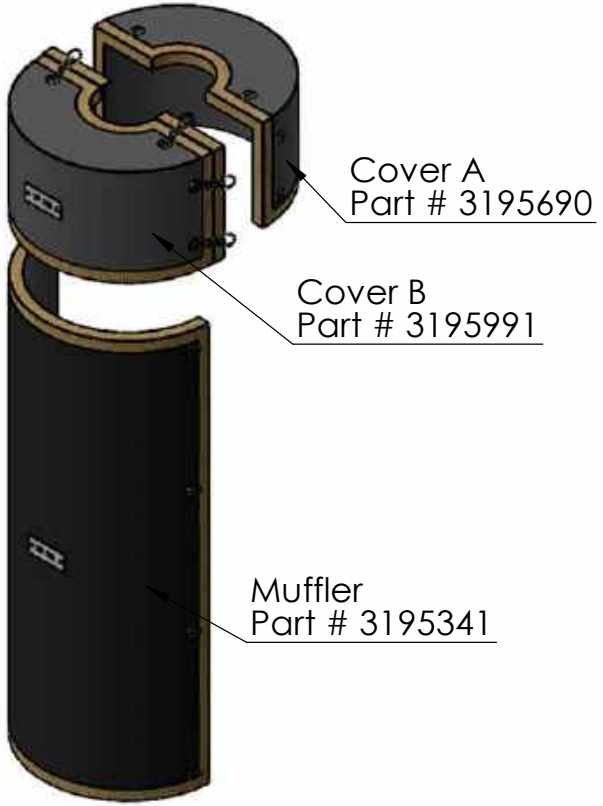

PROPRIETARY AND CONFIDENTIAL
THE INFORMATION HEREON IS THE PROPERTY OF KALB CORP. AND/OR ITS SUBSIDIARIES.
WITHOUT WRITTEN PERMISSION, ANY COPYING, TRANSMITTAL TO OTHERS, AND ANY USE
EXCEPT THAT FOR WHICH IT IS LOANED, IS PROHIBITED

Peterbilt
520 12L Diesel (Engine)
K604

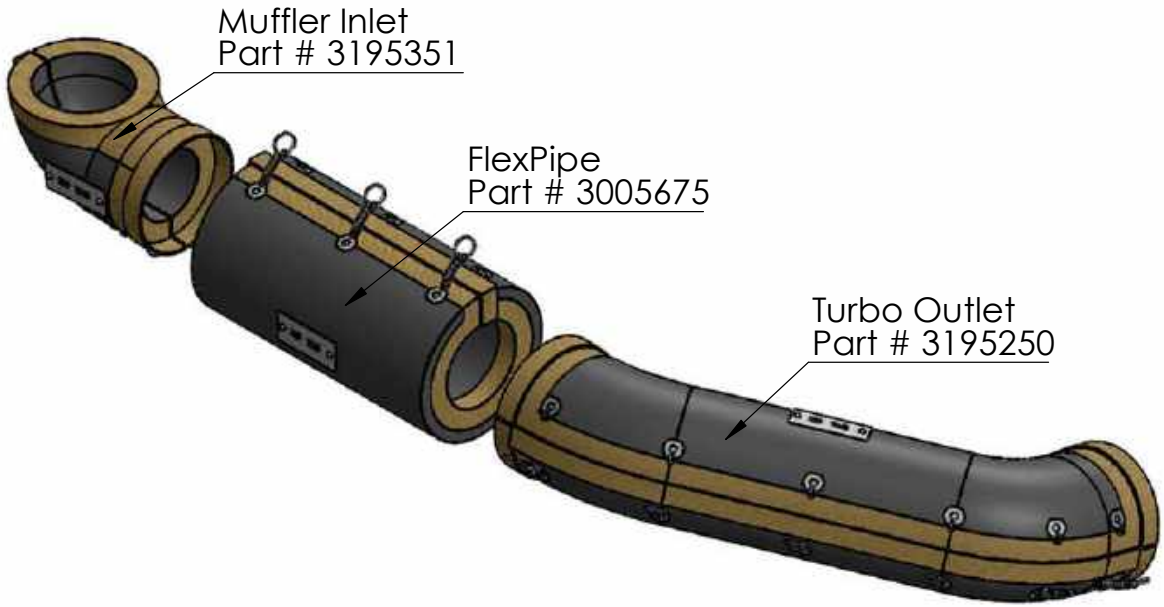

PROPRIETARY AND CONFIDENTIAL
THE INFORMATION HEREON IS THE PROPERTY OF KALB CORP. AND/OR ITS SUBSIDIARIES.
WITHOUT WRITTEN PERMISSION, ANY COPYING, TRANSMITTAL TO OTHERS, AND ANY USE
EXCEPT THAT FOR WHICH IT IS LOANED, IS PROHIBITED

NEXTRAN® TRUCK CENTERS

Peterbilt
520 12L CNG
K612

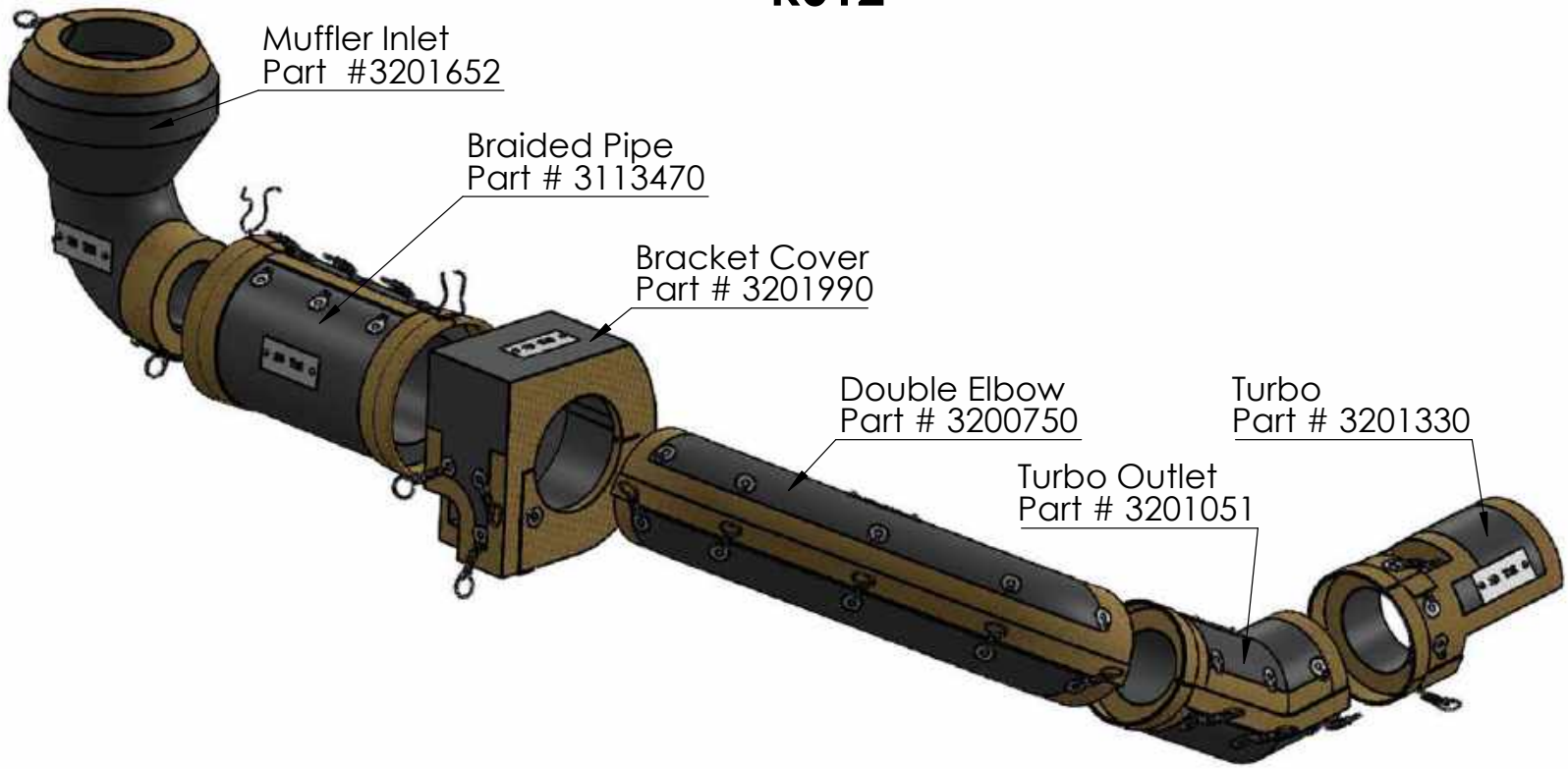

PROPRIETARY AND CONFIDENTIAL
THE INFORMATION HEREON IS THE PROPERTY OF KALB CORP. AND/OR ITS SUBSIDIARIES.
WITHOUT WRITTEN PERMISSION, ANY COPYING, TRANSMITTAL TO OTHERS, AND ANY USE
EXCEPT THAT FOR WHICH IT IS LOANED, IS PROHIBITED

101293

Peterbilt
567 Roll Off
Truck 2019
K616

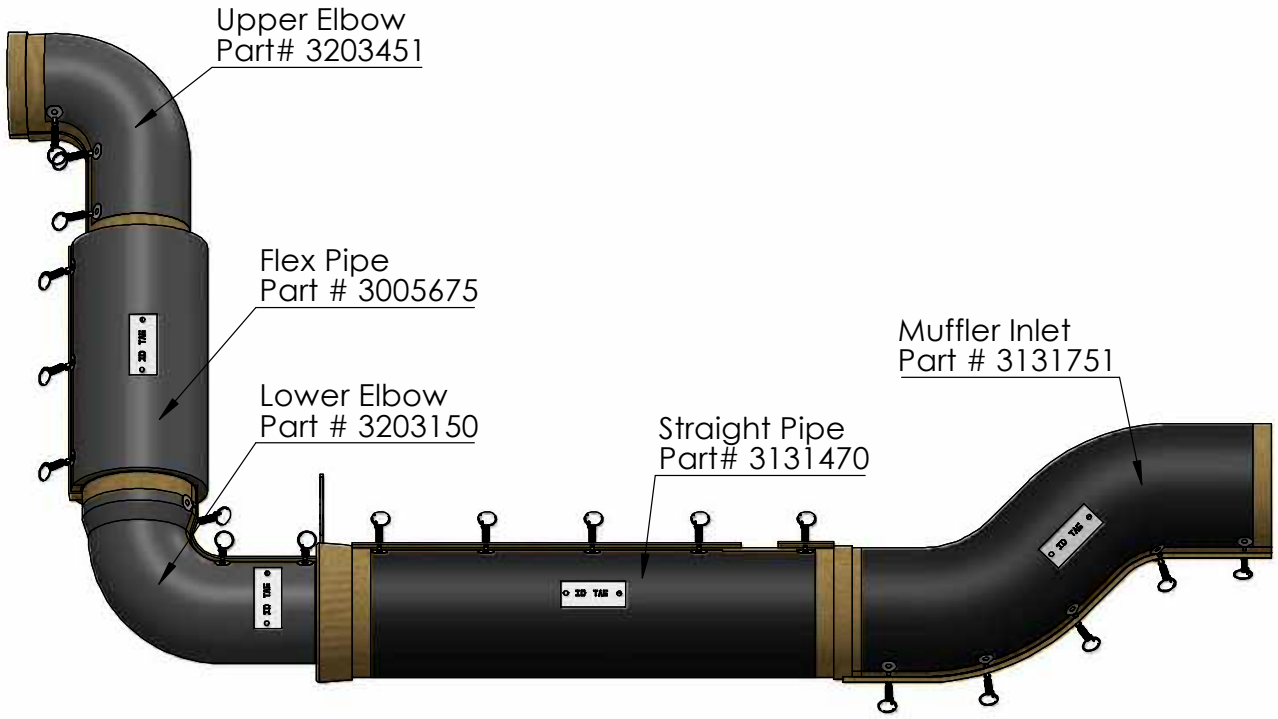

PROPRIETARY AND CONFIDENTIAL
THE INFORMATION HEREON IS THE PROPERTY OF KALB CORP. AND/OR ITS SUBSIDIARIES.
WITHOUT WRITTEN PERMISSION, ANY COPYING, TRANSMITTAL TO OTHERS, AND ANY
USE EXCEPT THAT FOR WHICH IT IS LOANED, IS PROHIBITED

Western Star Insulation Kits

Western Star
4900 SB
Kit # K544

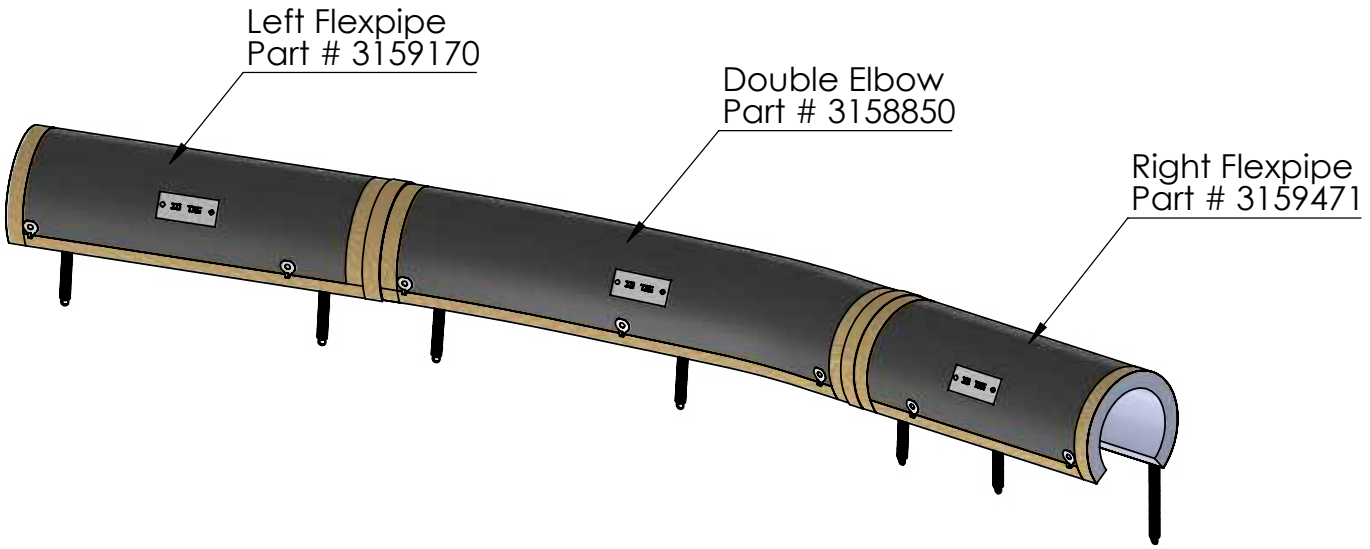

PROPRIETARY AND CONFIDENTIAL
THE INFORMATION HEREON IS THE PROPERTY OF KALB CORP. AND/OR ITS SUBSIDIARIES. WITHOUT WRITTEN PERMISSION, ANY COPYING, TRANSMITTAL TO OTHERS, AND ANY USE EXCEPT THAT FOR WHICH IT IS LOANED, IS PROHIBITED

K544

Ferrara Insulation Kits

NEXTRAN® TRUCK CENTERS

Ferrara Fire Apparatus
2011 HME Ferrara Ember
K628

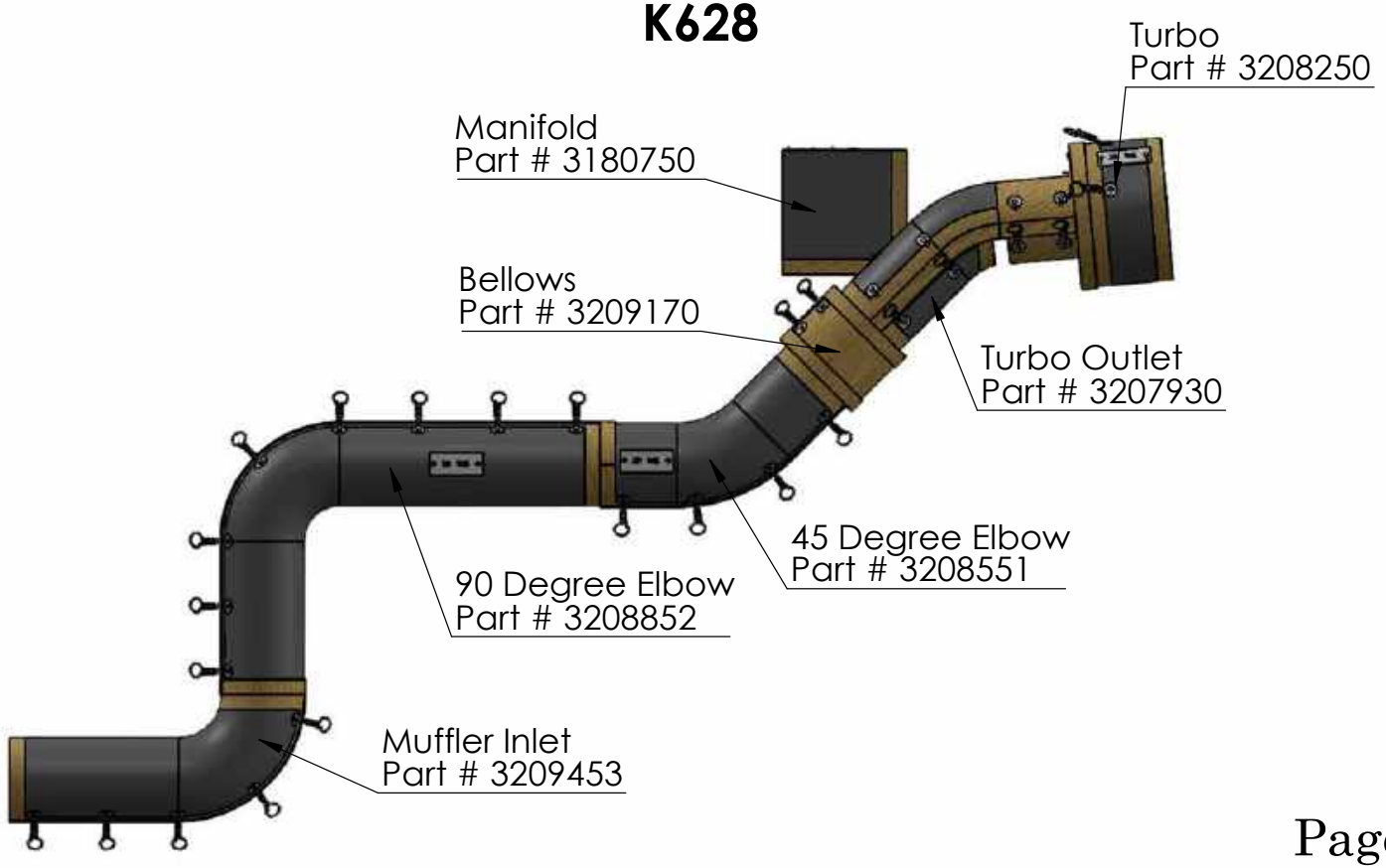

PROPRIETARY AND CONFIDENTIAL
THE INFORMATION HEREON IS THE PROPERTY OF KALB CORP. AND/OR ITS SUBSIDIARIES.
WITHOUT WRITTEN PERMISSION, ANY COPYING, TRANSMITTAL TO OTHERS, AND ANY USE
EXCEPT THAT FOR WHICH IT IS LOANED, IS PROHIBITED

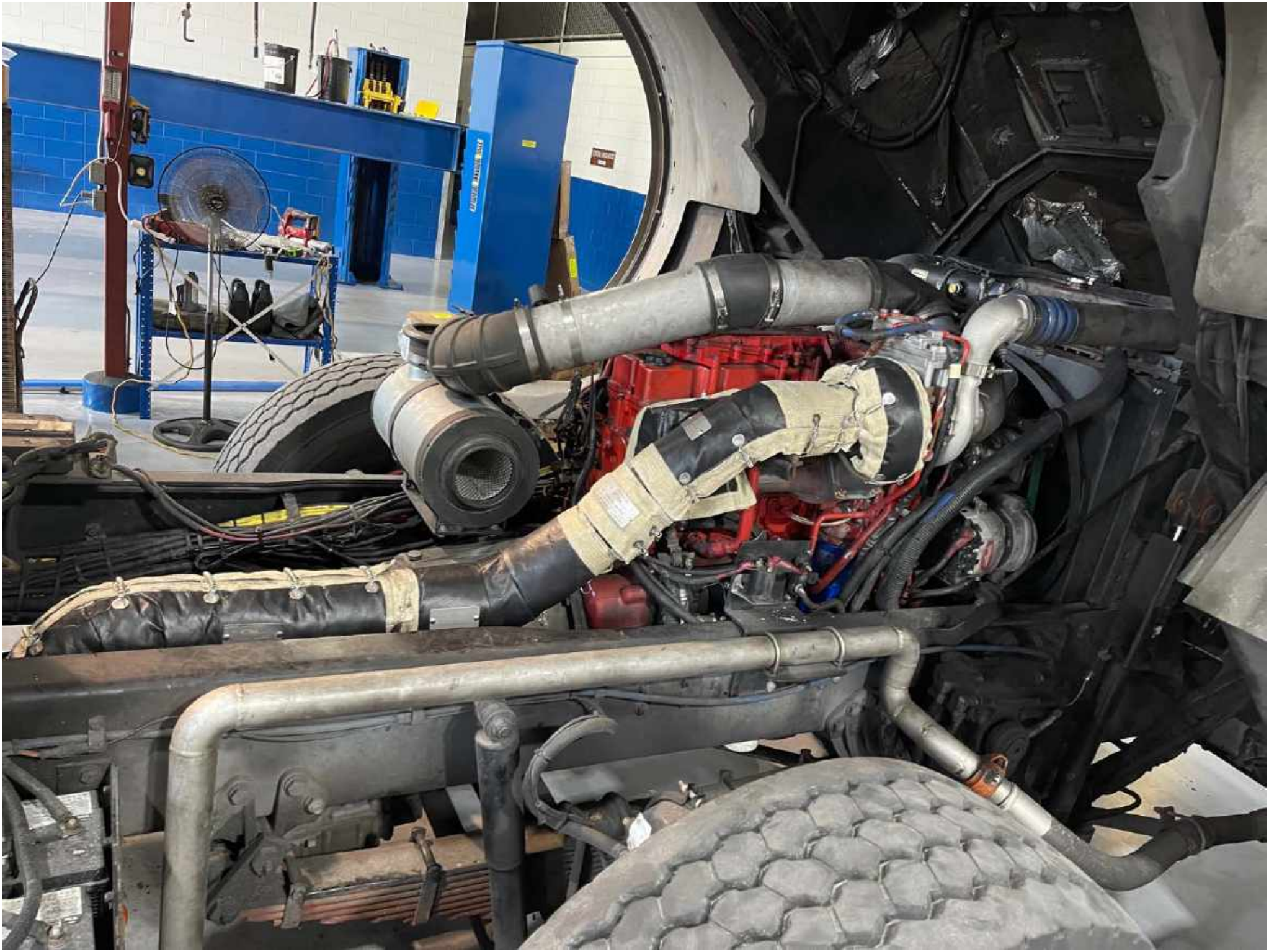

Distributed by:

www.nextranusa.com

NEXTRAN® TRUCK CENTERS

Ferrara Fire Apparatus
2014 Ferrara Cinder
K631

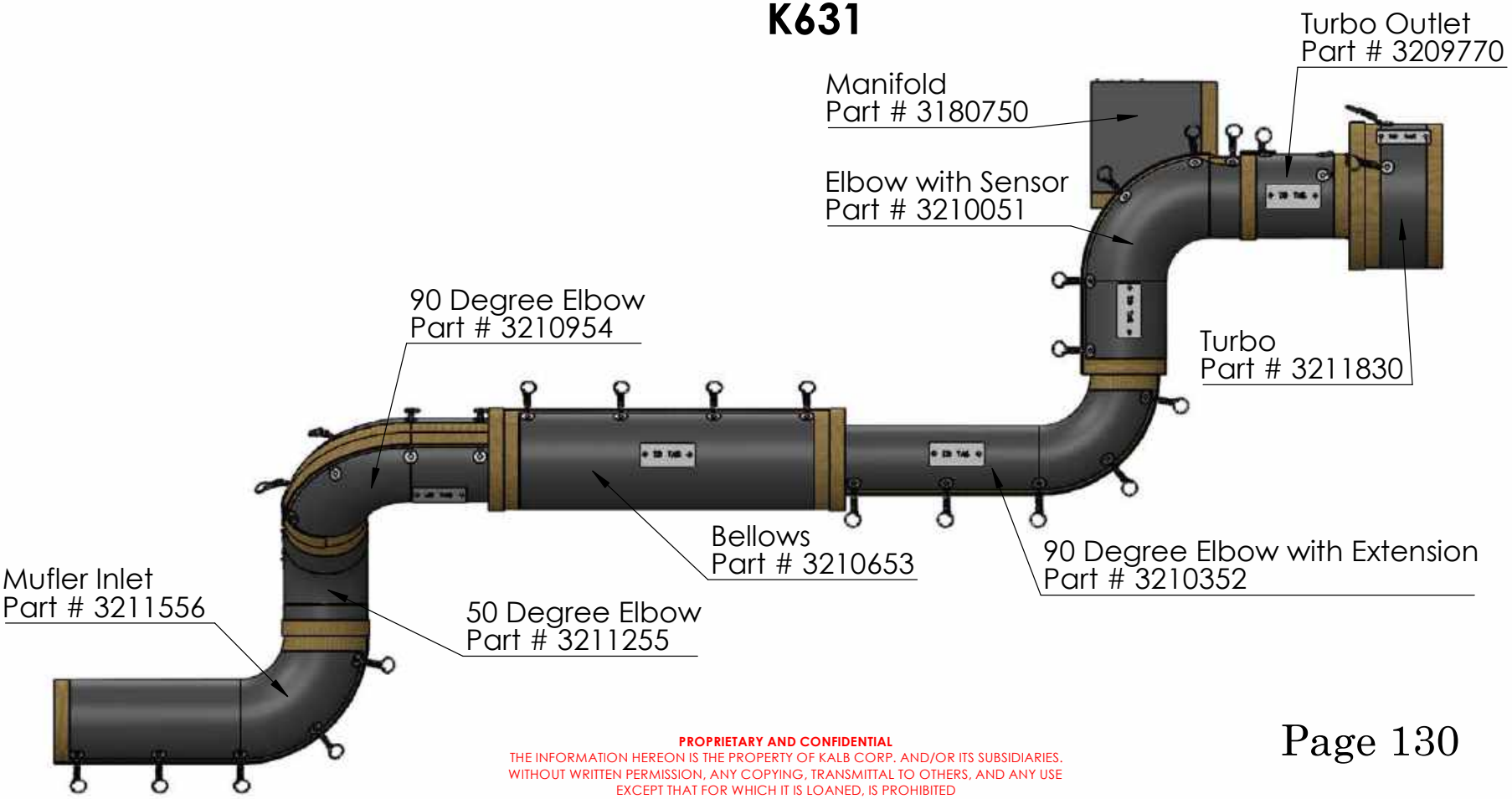

PROPRIETARY AND CONFIDENTIAL
THE INFORMATION HEREON IS THE PROPERTY OF KALB CORP. AND/OR ITS SUBSIDIARIES. WITHOUT WRITTEN PERMISSION, ANY COPYING, TRANSMITTAL TO OTHERS, AND ANY USE EXCEPT THAT FOR WHICH IT IS LOANED, IS PROHIBITED

Price list for truck insulation kits

Mack

Truck Kits	Truck Description	Page
Kit K185	688s MR/LE 613	3
Kit K186	MRU/LEU 613 '07-'10	5
Kit K225	LEU/LR 633	7
Kit K226	MRU 633	9
Kit K290	MRU 613 '10-'12	11
Kit K293	MRU/LEU/TE64 613 '12-'21	13
Kit K338	LEU 613 '10-'12	15
Kit K451	TE64/LR '19 633	17
Kit K454	Mack w/Detroit Diesel Eng.	19
Kit K484	Granite CV713 '03-'07	21
Kit K577	Granite CV713 Mixer	23

Autocar

Kit K112	Right Hand CNG 9L	26
Kit K113	Left Hand CNG 9L	28
Kit K146	ACX CNG 9L 2018	30
Kit K364	WX Diesel 2008	32
Kit K367	ACX CNG Side Loader 2018	34
Kit K370	WX64 Diesel	36

Price list for truck insulation kits

Truck Kits	Truck Description	Page
	Autocar	
Kit K376	WX64 Diesel 2007	38
Kit K402	ACX CNG ISX12 2017	40
Kit K417	ISM Diesel 2009	42
Kit K420	WXLL 12L Diesel 2009	44
Kit K423	WX64 Diesel 2005	45
Kit K444	ACX64 CNG 2019	47
Kit K457	WX Diesel 5" Exhaust 2008	49
Kit K523	ACX Can Cover 2019	50
Kit K526	ISX12N CNG 2018	53
3113470	ACX64 CNG Patch 9"	55
3125475	ACX64 CNG 13" Patch Part	57
3148990	ACX64 CNG Heat Shield	59
Kit K553	ACX CNG L9N 2019	61
3159742	Diffuser	63
Kit K568	ISL 9L Diesel 2011	65
Kit K800	ACX64 CNG Patch Kit	67
Kit K571	9L Diesel 2018-2020	69
Kit K574	9L Diesel 2017	71
Kit K589	ACX Catalyst 2017	73

Price list for truck insulation kits

Truck Kits	Truck Description	Page
	Freightliner	
Kit K358	FL112 Diesel	76
Kit K361	FL112 Rear Loader Diesel	78
Kit K379	Fl114 Vacon	80
Kit K384	Condor Diesel	82
Kit K399	M2112 diesel	83
	Peterbilt	
Kit K297	320 9L CNG	86
Kit K298	320 12L CNG	88
Kit K326	9L & 12L Diesel 2014	90
Kit K339	320 9L Diesel 2008	92
Kit K373	320 12L Diesel	94
Kit K381	320 Diesel 2006	95
Kit K520	567 CNG Roll Off	97
Kit K529	365 CNG Roll Off	99
Kit K538	9L Diesel After Treatment	100
Kit K541	520 9L CNG 2019	103
3158240	520 9L CNG Can Cover	105
Kit K547	320 9L Diesel 2000	107
3158541	Diffuser	109
Kit K580	567 Diesel Mixer	111

Price list for truck insulation kits

Truck Kits	Truck Description	Page
	Peterbilt	
Kit K583	357 Diesel Mixer	113
Kit K586	356 Diesel Mixer	115
Kit K601	520 12L DPF	117
Kit K604	520 12L Diesel	119
Kit K612	520 12L CNG	121
Kit K616	567 Roll Off 2019	123
	Western Star	
Kit K544	4900 SB	125
	Ferrara	
Kit K628	2011 HME Ember	128
Kit K631	2014 Cinder	130